Valves & Regulators

- Pressure
  - Electronic Pressure Switches
  - Mechanical Pressure Switches
  - Pressure Transducer
- Valves & Regulators
- Temperature
- Level
- Flow
- Air Suspension Valves

Barksdale
CONTROL PRODUCTS
CRANE
Barksdale, Inc./Barksdale GmbH
A Subsidiary of Crane Co.

Barksdale
CONTROL PRODUCTS

Table of Contents

Valves & Regulators

Directional Control Valve Products Supplemental Guide 3

Valves

Series 9000, 9020 - Shear-Seal® Directional Control Valve 7
Series 9040, 9080 - Low Pressure OEM Valves 9
Series 6140, 6180 - High Pressure OEM Valves 11
Series 6900, 6940 - High Pressure OEM Manipulator Valves 13
Series 140, 200, 920, 5620 - Heavy Duty Valves 15
Series 3760 - Subplate Mounted Heavy Duty Valve 17
Models A14 and H14 - Series II Valve 19
Model 371MT7 - Explosion Proof Position Indicator 21
Series 4140 - High Pressure Valve 23
518, 526 Series - Microtorque™ Valve 25
Series 422 Solenoid Valve - Shear-Seal® Directional Control 27

Regulators

Series 20313 - 1/2” Heavy Duty Hydraulic Regulator 29
Series 20415 - 3/4” Hydraulic Regulator 31
Series 20495 - 3/4” Heavy Duty Hydraulic Regulator 33
Series 20517 - 1-½” Hydraulic Regulator 35
Series 20597 - 1-½” Heavy Duty Hydraulic Regulator 37

Relief Valve

Series 8010 - Pressure Relief Valve 39
Installation and Operating Instructions for Hydraulic Relief Valve 41

Interflow and Non-Interflow in Barksdale Valves

Interflow in a Barksdale Shear-Seal® valve is a small amount of fluid flow from the Pressure A and B ports to the return port through the clearance between the rotor and the body. This interflow occurs whenever the valve is shifted from one position to another or when the valve is being used for throttling. This is due to the Shear-Seal® in the valve being only partially covered by the rotor. Interflow is not leakage and does not occur when the valve is fully engaged.

The interflow in a Shear-Seal® valve is beneficial in that it reduces the hydraulic shock or "water hammer" that can occur when a valve is closed rapidly. The small amount of interflow between ports acts as a cushion as the fluid flow is stopped in the system.

Non-interflow valves are constructed with Shear-Seal®s using a much smaller flow passage than a comparably sized interflow valve. By doing this, the orifice in the pressure seal and rotor are completely covered during transition thus preventing interflow. Non-interflow valves may be required when precise control of a cylinder is needed and the small settling associated with interflow valves can not be tolerated. Non-interflow valves have a much lower flow rate than interflow valves with the same port size. Mandatory higher force is required to actuate them.

Barksdale Shear-Seal® Valves are available with many standard options as well as special order features. Many of the options available are listed below. Consult Factory for additional details and availability for a particular valve model. Don't see what you need here? Call us - we're only a phone call away.

Seal Material	Std. P/N Suffix
Butyl	-Z10
Neoprene	-Z12
Viton®	-Z13
EPR	-Z15
Silicone	-Z16
FSR	-Z17
Thiokol	-Z18
Teflon (PTFE)	-Z19
Disogrin	-Z21

Modification	Std. P/N Suffix
2-Position 45° CW detent	-Z30
2-Position 45° CCW detent	-Z31
2-Position 90° detent	-Z32
No valve detent	-Z33
No valve handle	-Z34
Valve with actuator mounting Hardware only (no actuator)	-Z35

Maintenance

1. Disassemble and inspect. Replace or repair damaged or worn parts and "O" rings; clean all parts including solenoid and plunger. Grease valve parts before assembly. The solenoid should be cleaned at least every 1,000,000 cycles or every six months. The valve should be checked every 2,000,000 or once a year.
2. All Barksdale manual selector valves for water service are equipped with a grease fitting in the housing. On untreated water, valve should be lubricated through this fitting. Frequency of lubrication depends entirely on duty cycle of valve. An increase in handle load will indicate exactly what lubrication schedule should be followed. Use water resistant lubricant such as Socony-Vacuum "Sovarex 2W", Shell "Alvania" or equivalent. Preceding operation may be disregarded if valve is used on water treated with soluble oil.
3. At the first sign of excessive internal leakage the valve should be disassembled and the source of leakage repaired. Allowing valve to continue in operation may cause damage to other components, as the escaping fluid is generally in the form of a jet stream.

WARNING: Reverse assembly of any valve parts may result in high case pressure and possible injury. Assembly drawings, sales drawings and parts lists MUST be consulted.

Pressure Drop Curves

(Theoretical)

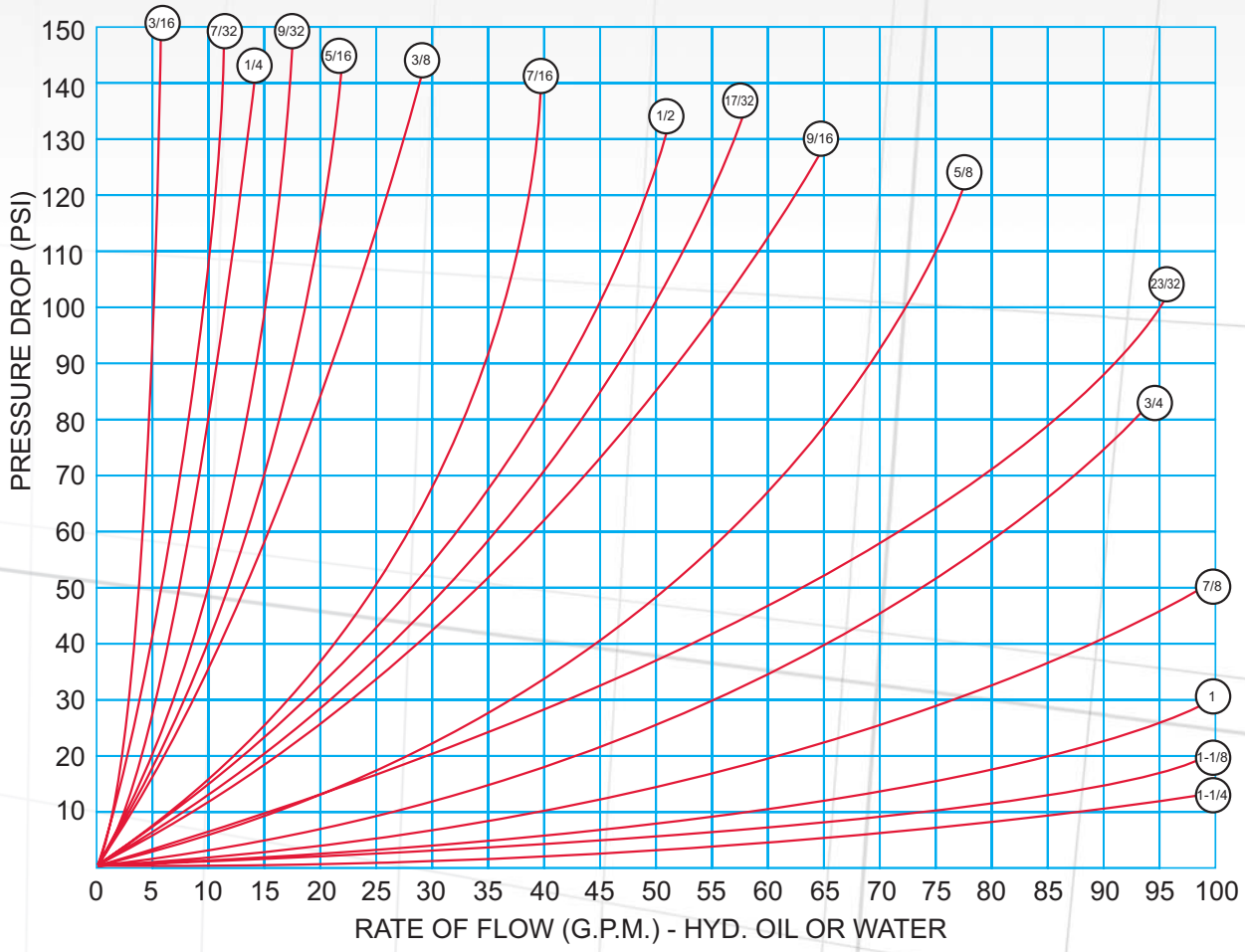

Pressure Drop

Barksdale's Shear-Seal® Valves have a much lower pressure drop than other valve technologies. This is possibly due to smooth internal passages and transitions within the valves which keep turbulent fluid flow to a minimum. This translates to less heat build-up and higher pressures available to perform the required work.

Determine Pressure Drop for Barksdale Shear-Seal Valves

1. Determine the Rate of Flow in G.P.M. or L.P.M. for fluid being controlled.
2. Determine minimum flow passage for valve from vale data sheet or sales drawing.
3. Locate the Pressure Drop Curve from the chart above for the appropriate minimum flow passage (indicated by the small circles at each curve).
4. Read the Pressure Drop from the vertical axis at the point where the flow rate (horizontal axis) intersects the appropriate pressure drop curve.

Note: The Pressure Drop is about the same in all flow directions.

Barksdale
CONTROL PRODUCTS
CRANE Barksdale, Inc./Barksdale GmbH
A Subsidiary of Crane Co.

Velocity Curves

(Theoretical)

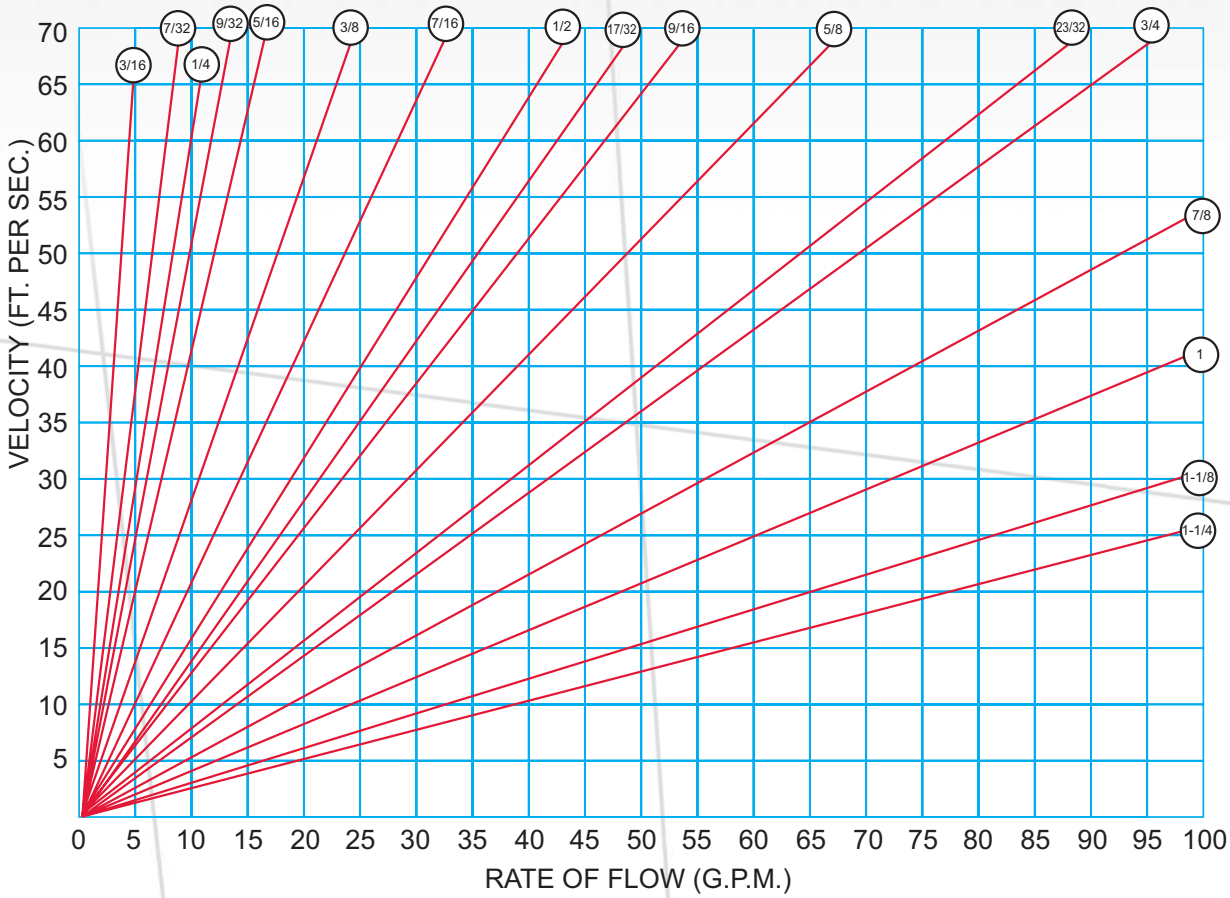

Fluid Velocity

Barksdale's Shear-Seal® Valves control fluid at a much higher velocity than other types of valve technologies. This means that a smaller valve can be used to do the same types of job, saving you space and component costs. The recommended velocity for Barksdale valves is about 30 ft/sec (9.1 m.sec) for continuous operation. However, the valve can easily handle higher velocities up to 60 ft/sec (19.3 m/sec) for intermittent duty.

Determining Fluid Velocity in a Shear-Seal Valve for a known Rate of Flow

1. Determine the Rate of Flow in G.P.M. or L.P.M. for fluid being controlled.
2. Determine minimum flow passage for valve from valve data sheet or sales drawing.
3. Locate the Velocity curve from the chart above for the appropriate minimum flow passage (indicated by the small circles at each curve).
4. Read the Velocity from the vertical axis at the point where the flow rate (horizontal axis) intersects the appropriate Velocity curve.

Trouble-Shooting Pointers

Barksdale Manual Directional Control Valves

SUSPECTED TROUBLE High force required to shift valve Possible Cause	SOLUTION
1 Restriction or blockage in "return" port causing back pressure in excess of maximum allowable for valve style	1 Remove restriction
2 Valve installed in system incorrectly allowing pressure to be applied to return port	2 Install valve correctly
3 Bent detent disk rubbing valve housing	3 Repair or replace detent disk
4 Dirt or debris under trust washer causing tipping of rotor	4 Disassemble and clean valve
5 Worn or missing pin rotor pin on shaft which allows rotor to rub on housing	5 Disassemble and replace shaft pin
6 Worn or scored thrust washers causing bearings to bind	6 Replace thrust washers and bearings. If balls run on top of rotor inspect this area for damage as well.
7 Pressure in excess of valve rating	7 Reduce working pressure of valve in system with regulator, relief valve or other means.
8 Lip worn off of Shear-Seal®	8 Replace Shear-Seals®
9 Galling between Shear-Seal® and rotor	9 This is typically an affect of rotor tipping. Replace Shear-Seal®. If possible grind and lap rotor and use shim on top of rotor to make up difference that is ground off. Otherwise replace rotor.

SUSPECTED TROUBLE Symptom: Leakage around shaft	SOLUTION
1 Worn shaft O-ring	1 Replace shaft O-ring
2 Enlarged shaft hole in housing caused by side load on shaft. Typically only found when valve is actuated by some mechanical means which is misaligned	2 Replace housing. Inspect shaft for wear and replace if necessary. Correct side loading condition.

SUSPECTED TROUBLE Internal Leakage around Shear-Seal	SOLUTION
1 Worn Shear-Seal O-ring	1 Replace O-ring

SUSPECTED TROUBLE Internal Leakage Across Face of Shear-Seal®	SOLUTION
1 Scratch or other damage to face of Shear-Seal®	1 Replace Shear-Seal®. Field dressing can be performed on the face of Shear-Seal® by lapping with 600 grit paper. Paper should be held securely on a surface plate for best results.
2 Scratch or other damage to rotor	2 Lap rotor with 600 grit paper as described above. Replace rotor if leakage continues
3 Incorrect position of rotor in relation to Shear-Seals®. This can be caused by worn rotor shaft pins or worn detent disk	3 Replace detent disk or shaft pins
4 Wear on surface of Shear-Seal® after millions of cycles. This can reduce spring tension on Shear-Seal® due to material loss on seal face.	4 Replace Shear-Seal®s
5 Shear-Seal® spring fails due to breakage or taking permanent set.	5 Replace springs

SUSPECTED TROUBLE External Leakage Between Body and Housing	SOLUTION
1 Improperly installed body O-ring	1 Replace body O-ring and install completely in O-ring groove
2 Excessive back pressure in housing caused by restriction or blockage in return port. Back pressure can cause body bolts to stretch and allow leakage at body O-ring	2 Check pressure at return port with pressure gauge and insure it is below maximum rating for valve. Replace body O-ring
3 Body bolts not tightened to specification on assembly drawing.	3 Replace body O-ring and tighten bolts as per assembly drawing

See Barksdale's Standard Conditions of Sale • Specifications are subject to modification at any time • Bulletin #B0050-D • 03/08 • ©2008 • Printed in the U.S.A.

Shear-Seal® Directional Control Valve

Series 9000, 9020

Features

- Original Shear-Seal® technology
- Interflow/non interflow
- Easy panel mounting
- Tolerates contaminates
- Spring return option

Applications

- Pilot valve for pneumatic valve actuators
- Gas manifold controls
- Manual control of 2-position cylinder

Shown with option "D" red ball type handle

General Specifications*

Working Pressure:	Pneumatic or hydraulic from 150 psi to 350 psi (10.3 to 24.1 bar); see table
Cv, Minimum Orifice:	See table
Back Pressure:	Must not exceed 250 psi (17.2 bar) at return port for satisfactory operation
Proof Pressure:	1-1/2 times working pressure except at return port (without damage to valve)
Burst Pressure:	2-1/2 times working pressure except at return port (300 psi, 20.7 bar)

Media Temperature Range:	-40° to +250°F (-40° to +121°C)
Wetted Material:	
Body:	Anodized aluminum
Standard O-Rings:	Buna N
Pressure Seals:	Brass
Rotor:	Hard anodized aluminum
Handle Rotation:	90°; 45° each side of center
Detent:	3-position detent (except -MC, -MR options)

* See product configurator for additional options.

4-Way Valves
FLOW PATTERNS
(VIEWED FROM SHAFT END)

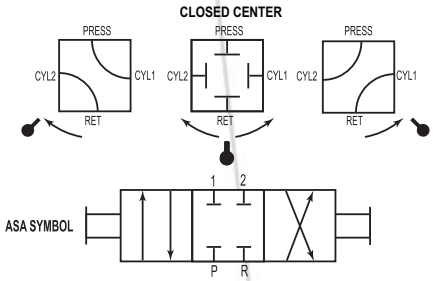

Manipulator Valves
FLOW PATTERNS
(VIEWED FROM SHAFT END)

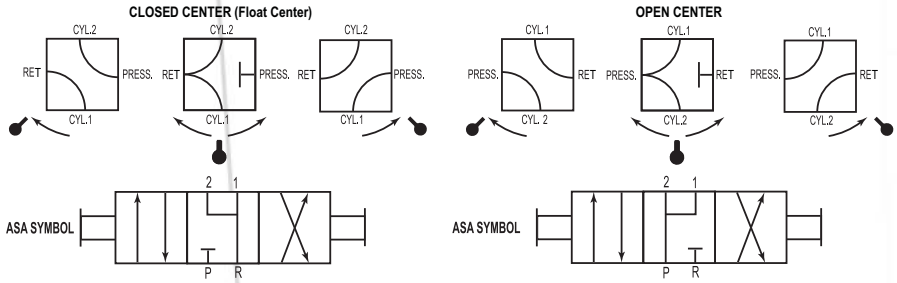

	Port Size NPT	Min. Flow Passage Dia.	Cv Factor	Air and Oil Rated Pressure psi (bar)	Manipulator Rated Pressure psi (bar)	Approx. Shipping Weight lbs. (kg)
9000 Series Non Interflow	1/4"	3/16"	0.52	150 (10.3)	150 (10.3)	2 (0.9)
	3/8"	3/16"	0.52	150 (10.3)	150 (10.3)	2 (0.9)
9020 Series Interflow	1/4"	3/8"	2.3	350 (24.1)	250 (17.2)	2 (0.9)
	3/8"	3/8"	2.3	350 (24.1)	250 (17.2)	2 (0.9)
	1/2"	3/8"	2.3	350 (24.1)	250 (17.2)	2 (0.9)

Barksdale
CONTROL PRODUCTS
CRANE
Barksdale, Inc./Barksdale GmbH
A Subsidiary of Crane Co.

Technical Drawings

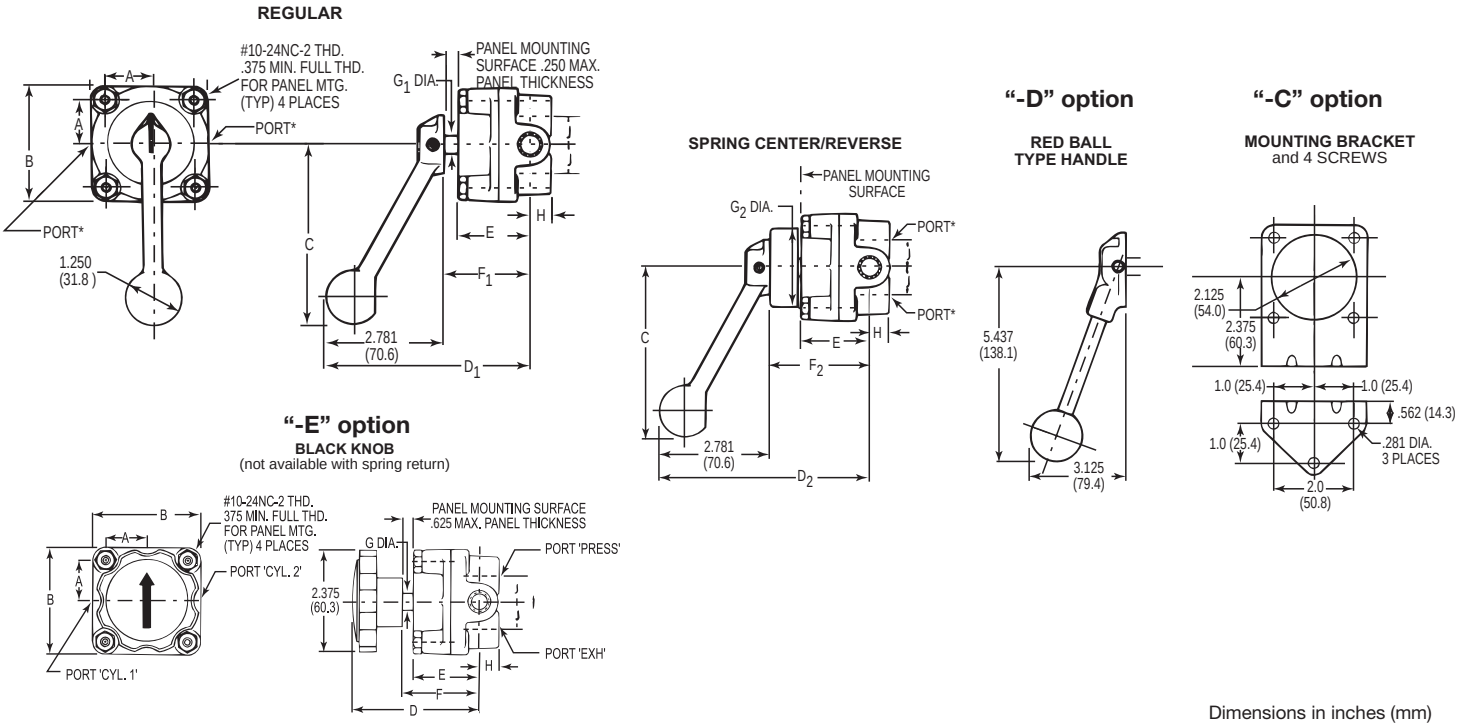

Dimensions in inches (mm)

PORT SIZE NPT	A	B	C	Black Knob D	Regular D-1	Spring Center/ Rever D-2	E	Black Knob F	Regular F-1	Spring Center/ Rever F-2	Black Knob G	Regular G-1	Spring Center/ Rever G-2	H	J
1/4 & 3/8	1.000 (25.4)	2.625 (66.7)	4.125 (104.8)	3.656 (92.9)	4.781 (121.4)	5.188 (133.8)	1.688 (42.9)	2.062 (52.4)	2.000 (50.8)	2.406 (61.1)	0.437 (11.1)	0.437 (11.1)	1.906 (48.4)	0.531 (13.5)	0.656 (16.7)
1/2	1.000 (25.4	3.125 (79.4)	4.125 (104.8)	3.718 (94.4)	4.843 (123.0)	5.250 (133.4)	1.750 (44.5)	2.125 (54.0)	2.062 (52.4)	2.468 (62.7)	0.437 (11.1)	0.437 (11.1)	1.906 (48.4)	0.625 (15.9)	0.937 (23.8)

Product Configurator

Example:	902	2	-M			

Series

900	Non interflow
902	Interflow

Port Size

1	1/4" pressure port
2	3/8" pressure port
3	1/2" pressure port (interflow only)

Operation

-M	Manual operation
-MC	Manual (spring return to center)
-MR	Manual (spring return to reverse)

Optional O-ring Material

-Zxx	See supplemental guide

Options

-B	2-position 90° rotation (no center position)
-C	Mounting bracket w/ 4 screws
-D	Red ball type handle
-CD	Mounting bracket & red ball type handle
-E	Black knob (not available for spring return)

Flow Pattern

	Blank if closed center selector
-A	Closed center manipulator
-G	Open center manipulator

3211 Fruitland Avenue • Los Angeles, CA 90058 • ☎ 800-835-1060 • Fax: 323-589-3463 • www.barksdale.com

Barksdale CONTROL PRODUCTS

Low Pressure OEM Valves

Series 9040, 9080

Patent # 3,014,499

Features

- Original Shear-Seal® technology
- Low pressure drop
- Tolerates contaminates
- Spring return option
- Flexible design

Applications

- Paper mill controls
- Air pilot valves
- Halon fill systems
- Heating oil control
- Compressed gas manifold control

General Specifications*

Working Pressure:	Gasses or hydraulic fluids up to 500 psi (34 bar)
Flow Capacity, Cv:	See table
Back Pressure:	Must not exceed 250 psi (17.2 bar) at return port for satisfactory operation
Pressure Drop:	14 psi (0.96 bar) at 20 ft/sec See Supplemental Guide for more detailed information
Proof Pressure:	1-1/2 times working pressure except at return port
Burst Pressure:	2-1/2 times working pressure except at return port (500 psi [34 bar])

Media Temperature Range:	-40° to +250°F (-40° to +121°C)
Wetted Material:	
Rotor:	Hard anodized aluminum
Pressure Seals:	Brass
Shaft:	Stainless steel
Body, Housing:	Anodized aluminum
Bearings:	Teflon/stainless steel
Standard O-rings:	Buna N, others available

* See product configurator for additional options.

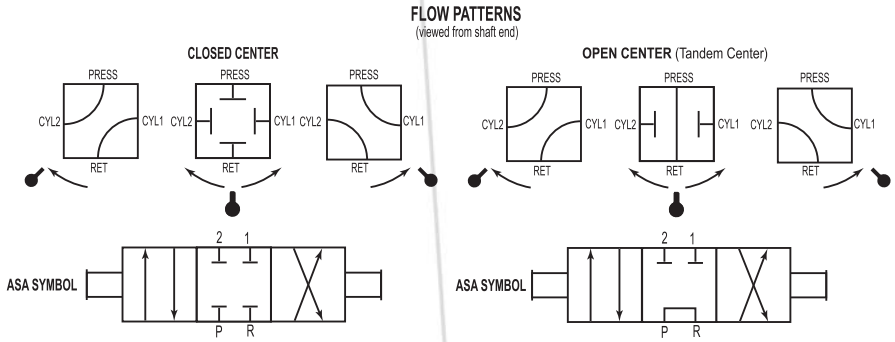

Main Valve Port Size	Flow Capacity (Approx.) Service: Oil 20 ft/sec gpm (l/min)	40 ft/sec gpm (l/min)	60 ft/sec gpm (l/min)	Min. Flow Passage Dia.	Cv Factor	Approx. Shipping Weight lbs (kgs)
1/2" & 3/4"	14 (53)	28 (106)	Use Heavy Duty Valve	17/32"	4.80	3 (1.4)
1"	25 (95)	51(190)		23/32"	9.20	10-1/2 (4.8)
1-1/2"	62 (235)	124 (471)		1-1/8"	24.0	20 (9.1)

Barksdale
CONTROL PRODUCTS
CRANE Barksdale, Inc./Barksdale GmbH
A Subsidiary of Crane Co.

Technical Drawings

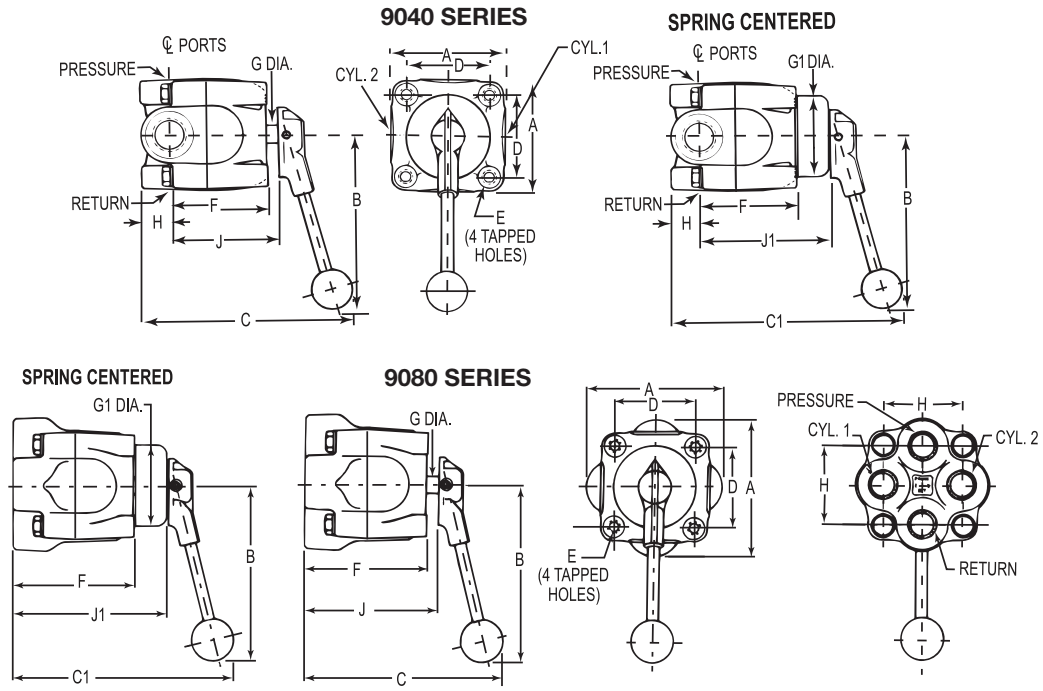

9040 Series Regular (side) Porting

Port Size NPT	A	B	C	C1	D	E	F	G Dia.	G1 Dia.	H	J	J1
1/2" & 3/4"	3.5 (88.9)	5.44 (138)	7.37 (187.3)	7.94 (201.6)	2.56 (65.0)	3/8 - 16 NC	3.03 (77.0)	0.56 (14.2)	2.56 (65.0)	0.88 (22.4)	3.38 (85.9)	3.94 (100)
1"	4.5 (114)	8.44 (214)	8.16 (207)	9.03 (229.4)	3.31 (84.1)	1/2 - 13 NC	3.59 (91.2)	0.75 (19.1)	3.375 (85.7)	1.06 (26.9)	3.94 (100)	4.81 (122.2)
1-1/2"	6.38 (162)	10.35 (263)	9.66 (245)	10.53 (267.5)	4.75 (121)	3/4 - 10 NC	4.656 (118.3)	0.88 (22.4)	3.375 (85.7)	1.37 (34.9)	5.03 (128)	5.906 (150)

9080 Series Straight (bottom) Porting

Port Size NPT	A	B	C	C1	D	E	F	G Dia.	G1 Dia.	H	J	J1
1/2" & 3/4"	4.19 (106)	5.44 (138)	7.34 (186)	7.9 (200.8)	2.56 (65.0)	3/8 - 16 NC	3.88 (98.6)	0.56 (14.2)	2.56 (65.0)	2.50 (65.5)	4.22 (107)	4.78 (121)

Dimensions in inches (mm)

Product Configurator

Example:	904	5	R	0	A	C	3		

Series

904	Regular (side) porting
908	Straight (bottom) porting

Port Size

3	1/2" NPT ports
4	3/4" NPT ports
5	1" NPT ports (Series 904 only)
7	1-1/2" NPT ports (Series 904 only)

Style

R	Regular (side) porting, (Series 904)
S	Straight (bottom) porting, (Series 908)

Pressure Range

0	500 psi max. Air or hydraulic fluid

Service

A	Air (pneumatic) or hydraulic fluid

Flow Pattern

C	Closed center
O	Open center (tandem center)

Position

3	Three position

Options

-A	SAE porting
-MC	Spring centering

Options

-	See Supplemental Guide for complete list

3211 Fruitland Avenue • Los Angeles, CA 90058 • ☎ 800-835-1060 • Fax: 323-589-3463 • www.barksdale.com

Barksdale CONTROL PRODUCTS

High Pressure OEM Valves

Series 6140, 6180

Patent# 3,014,499

Features

- Original Shear-Seal® technology
- Low pressure drop
- Tolerates contaminates
- Spring return option
- Flexible design for OEM requirements

Applications

- Hydraulic presses
- Military equipment
- Paper mill controls
- Hydraulic pilot valves
- Railroad maintenance equipment
- Halon fill systems

General Specifications*

Working Pressure:	Hydraulic fluid up to 3000 psi (206 bar)
Flow Capacity, Cv:	See table
Back Pressure:	Must not exceed 250 psi (17.2 Bar) at return port for satisfactory operation
Pressure Drop:	14 psi (0.96 bar) at 20 ft/sec See Supplemental Guide for more detailed information
Proof Pressure:	1-1/2 times working pressure except at return port
Burst Pressure:	2-1/2 times working pressure except at return port (see flow chart)

Media Temperature Range:	-40° to +250°F (-40° to +121°C)
Wetted Material:	
Rotor:	Hard anodized aluminum
Pressure Seals:	Brass
Shaft:	Stainless steel
Body Housing:	Anodized aluminum
Bearings:	Carbon steel
Standard O-rings:	Buna N, others available
Back-up Rings:	Teflon®

* See product configurator for additional options.

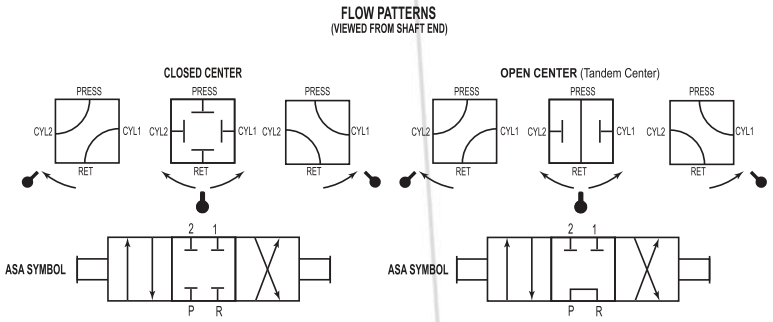

	Main Valve Port Size	Flow Capacity (Approx.) Service: Oil 20 ft/sec gpm (l/min)	40 ft/sec gpm (l/min)	60 ft/sec gpm (l/min)	Min. Flow Passage Dia.	Cv Factor	Approx. Shipping Weight lbs (kgs)	Return Port Burst Rating
	1/4" & 3/8"	5 (19)	10 (38)	Use Heavy Duty Valve	5/16"	1.56	1 1/2 (0.7)	3,000 psi (207 bar)
	1/2" & 3/4"	14 (53)	28 (106)		17/32"	4.80	3 (1.4)	
**	1"	25 (95)	51(190)		23/32"	9.20	10 1/2 (4.6)	2,000 psi (138 bar)
**	1-1/2"	62 (235)	124 (471)		1-1/8"	24.0	20 (9.1)	1,500 psi (103 bar)

** 6140 Series Only

Barksdale
CONTROL PRODUCTS
CRANE Barksdale, Inc./Barksdale GmbH
A Subsidiary of Crane Co.

Technical Drawings

6140 Series

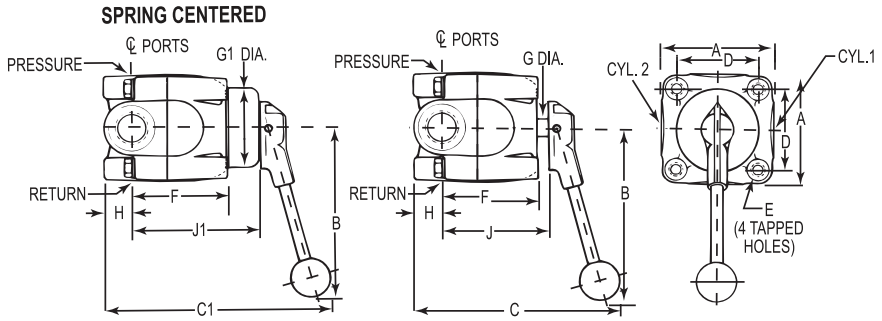

6180 Series

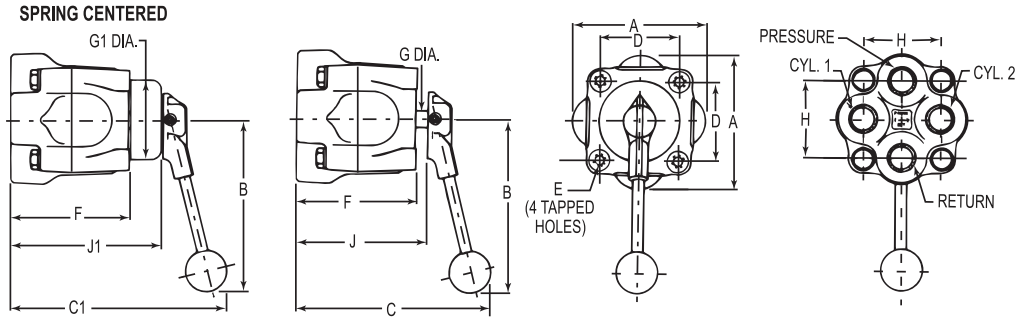

6140 Series In-Line (side) Porting

Port Size NPT	A	B	C	C1	D	E	F	G Dia.	G1 Dia.	H	J	J1
1/4" & 3/8"	2.63 (66.8)	5.44 (138)	6.38 (161.9)	6.718 (170.6)	1.81(46.0)	5/16 - 18 NC	2.31(58.7)	0.44 (11.2)	1.91(48.5)	0.56 (14.2	2.66 (67.6)	3.03 (77.0)
1/2" & 3/4"	3.5 (88.9)	5.44 (138)	7.37 (187)	7.93 (201)	2.56 (65.0)	3/8 - 16 NC	3.03 (77.0)	0.56 (14.2)	2.56 (65.0)	0.88 (22.4)	3.38 (85.9)	3.94 (100)
1"	4.5 (114)	8.44 (214)	8.16 (207)	9.03 (229.3)	3.31 (84.1)	1/2 - 13 NC	3.59 (91.2)	0.75 (19.1)	3.38 (86)	1.06 (26.9)	3.94 (100)	4.81 (122)
1-1/2"	6.38 (162)	10.35 (263)	9.66 (245)	10.53 (268)	4.75 (121)	3/4 - 10 NC	4.6 (118)	0.88 (22.4)	3.38 (86)	1.34 (34.0)	5.03 (128)	5.91 (150)

6180 Series Straight (bottom) Porting

Port Size NPT	A	B	C	C1	D	E	F	G Dia.	G1 Dia.	H	J	J1
1/4" & 3/8"	2.63 (66.8)	5.44 (138)	6.13 (156)	6.50 (165)	1.81(46.0)	5/16 - 18 NC	2.66 (67.6)	0.44 (11.2)	1.91(48.5)	1.50 (38.1)	3.00 (76.2)	3.38 (85.9)
1/2" & 3/4"	4.19 (106)	5.44 (138)	7.34 (186)	7.91 (201)	2.56 (65.0)	3/8 - 16 NC	3.88 (98.6)	0.56 (14.2)	2.56 (65.0)	2.50 (65.5)	4.22 (107)	4.78 (121)

Dimensions in inches (mm)

Product Configurator

Example:	614	2	R	3	H	C	3		

Series

614	Regular (side) porting
618	Straight (bottom) porting

Port Size

1	1/4" NPT ports
2	3/8" NPT ports
3	1/2" NPT ports
4	3/4" NPT ports
5	1" NPT ports (614 only)
7	1-1/2" NPT ports (614 only)

Style

R	Regular (side) porting (series 614)
S	Straight (bottom) porting (series 618)

Pressure

3	3,000 psi

Working Media

H	Hydraulic oil

Flow Pattern

C	Closed center
O	Open center (tandem center)

Position

3	3-position

Options

	See Supplemental Guide for complete list

Options

-A	SAE Porting
-MC	Spring centering *
-NF	Non-interflow (port size 1/4" and 3/8" NPT only)

* For 1" ported pressure rating 2,500 psi
Not available on 1-1/2" ported valves.

High Pressure OEM Manipulator Valves

Series 6900, 6940

Patent# 3,014,499

Features

- Original Shear-Seal® technology
- Low pressure drop
- Tolerates contaminates
- Spring return option
- Special flow pattern for OEM designs

Applications

- Hydraulic presses
- Military equipment
- Paper mill controls
- Pipe forming
- Railroad maintenance equipment

General Specifications*

Working Pressure:	Hydraulic fluid up to 3000 psi (206 bar)
Flow Capacity, Cv:	See table
Back Pressure:	Must not exceed 250 psi (17.2 Bar) at return port for satisfactory operation
Pressure Drop:	14 psi (0.96 bar) at 20 ft/sec See Supplemental Guide for more detailed information
Proof Pressure:	1-1/2 times working pressure except at return port
Burst Pressure:	2-1/2 times working pressure except at return port (3000 psi [206 bar])

Media Temperature Range:	-40° to +250°F (-40° to +121°C)
Wetted Material:	
Rotor:	Hard anodized aluminum
Pressure Seals:	Brass
Shaft:	Stainless steel
Body Housing:	Anodized aluminum
Bearings:	Carbon steel
Standard O-rings:	Buna N, others available
Back-up Rings:	Teflon®

* See product configurator for additional options.

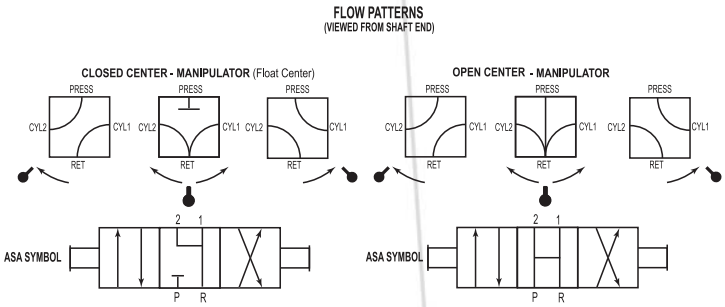

Main Valve Port Size	Flow Capacity (Approx.) Service: Oil 20 ft/sec gpm (l/min)	40 ft/sec gpm (l/min)	60 ft/sec gpm (l/min)	Min. Flow Passage Dia.	Cv Factor	Approx. Shipping Weight lbs (kgs)
1/4" & 3/8"	5 (19)	10 (38)	Use Heavy Duty Valve	5/16"	1.56	1 1/2 (0.7)
1/2" & 3/4"	14 (53)	28 (106)		17/32"	4.80	3 (1.4)

Barksdale
CONTROL PRODUCTS
CRANE
Barksdale, Inc./Barksdale GmbH
A Subsidiary of Crane Co.

Technical Drawings

6900 Series

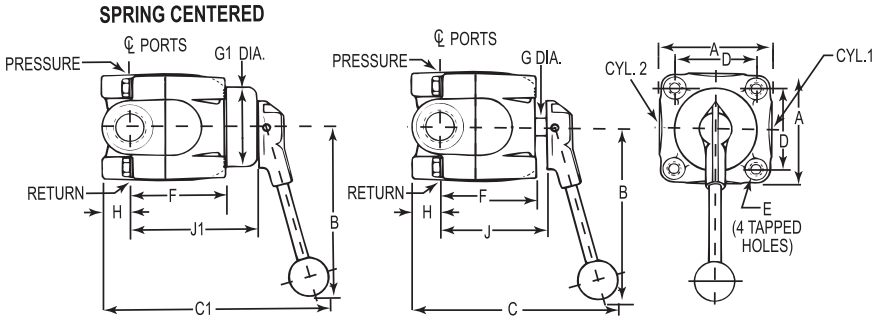

6940 Series

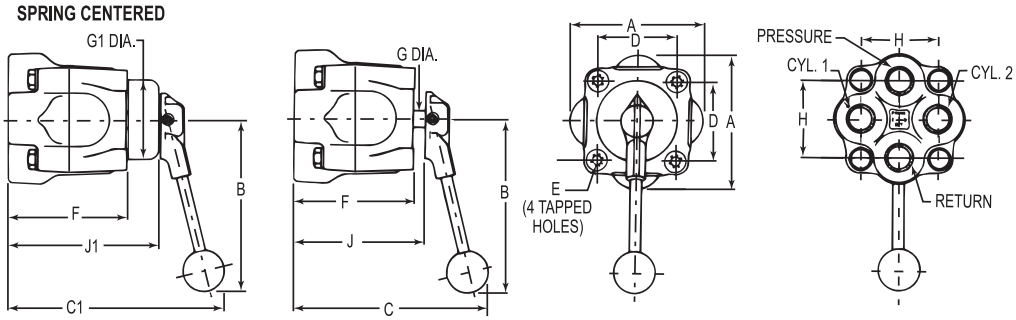

6900 Series In-Line (side) Porting

Port Size NPT	A	B	C	C1	D	E	F	G Dia.	G1 Dia.	H	J	J1
1/4" & 3/8"	2.63 (66.8)	5.44 (138)	6.38 (161.9)	6.718 (170.6)	1.81(46.0)	5/16 - 18 NC	2.31(58.7)	0.44 (11.2)	1.91(48.5)	0.56 (14.2	2.66 (67.6)	3.03 (77.0)
1/2" & 3/4"	3.5 (88.9)	5.44 (138)	7.37 (187)	7.93 (201)	2.56 (65.0)	3/8 - 16 NC	3.03 (77.0)	0.56 (14.2)	2.56 (65.0)	0.88 (22.4)	3.38 (85.9)	3.94 (100)

6940 Series Straight (bottom) Porting

Port Size NPT	A	B	C	C1	D	E	F	G Dia.	G1 Dia.	H	J	J1
1/4" & 3/8"	2.63 (66.8)	5.44 (138)	6.13 (156)	6.50 (165)	1.81(46.0)	5/16 - 18 NC	2.66 (67.6)	0.44 (11.2)	1.91(48.5)	1.50 (38.1)	3.00 (76.2)	3.38 (85.9)
1/2" & 3/4"	4.19 (106)	5.44 (138)	7.34 (186)	7.91 (201)	2.56 (65.0)	3/8 - 16 NC	3.88 (98.6)	0.56 (14.2)	2.56 (65.0)	2.50 (65.5)	4.22 (107)	4.78 (121)

Dimensions in inches (mm)

Product Configurator

Example:	690	2	R	3	H	C	3		

Series

690	Regular (side) porting, manipulator flow pattern
694	Straight (bottom) porting, manipulator flow pattern

Port Size

1	1/4" NPT ports
2	3/8" NPT ports
3	1/2" NPT ports
4	3/4" NPT ports

Style

R	Regular (side) porting (series 690)
S	Straight (bottom) porting (series 694)

Pressure

3	3,000 psi

Working Media

H	Hydraulic oil

Flow Pattern

C	Closed center manipulator (float center)
O	Open center (tandem center)

Position

3	3-position

Options

-A	SAE Porting
-MC	Spring centering
-NF	Non-interflow (port size 1/4" and 3/8" NPT only)

Options

	See Supplemental Guide for complete list

3211 Fruitland Avenue • Los Angeles, CA 90058 • ☎ 800-835-1060 • Fax: 323-589-3463 • www.barksdale.com

Barksdale CONTROL PRODUCTS

Heavy Duty Valves

Series 140, 200, 920, 5620

Patent# 2.696.219

Features

- Original Shear-Seal® technology
- High velocity flow
- Tolerates contaminates
- Low handle load at high pressures
- Spring return option
- Low pressure drop

Applications

- Land-based and offshore drilling equipment
- Steel mills
- Nitrogen charging panels
- Refineries and chemical processing plants
- Power generation facilities

General Specifications*

Working Pressure:	Air (pneumatic) up to 4,000 psi (276 bar) hydraulic oil or lubricated water up to 6,000 psi (413 bar)
Flow Capacity, Cv:	See table
Back Pressure:	Must not exceed 250 psi (17.2 bar) at return port for satisfactory operation
Pressure Drop:	14 psi (0.96 bar) at 20 ft/sec See Supplemental Guide for more detailed information
Proof Pressure:	1-1/2 times working pressure except at return port
Burst Pressure:	2-1/2 times working pressure except at return port (3,000 psi [206 bar])

Media Temperature Range:	-40° to +250°F (-40° to +121°C)
Rotor:	400 series stainless steel
Pressure Seals:	Stainless steel
Shaft:	Stainless steel
Body:	Bronze
Housing:	Ductile iron
Standard O-ring:	Buna N, others available
Back-up Rings:	Teflon®

* See product configurator for additional options.

FLOW PATTERNS
(viewed from shaft end)

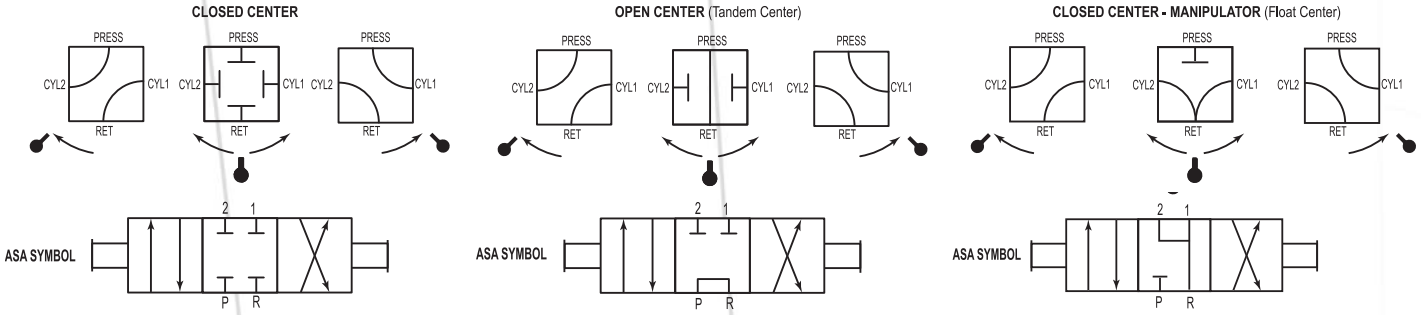

		Flow Capacity (Approx.) Service: Oil and Lubricated Water					
	Main Valve Port Size	20 ft/sec gpm (l/min)	40 ft/sec gpm (l/min)	60 ft/sec gpm (l/min)	Min. Flow Passage Dia.	Cv Factor	Approx. Shipping Weight lbs (kgs)
140/920 Series Valve	1/4”	3 (11)	6 (23)	9 (34)	1/4”	0.95	4.5 (2)
	3/8” & 1/2”	9 (34)	19 (72)	28 (106)	7/16”	3.20	8.5 (3.9)
	3/4” & 1”	25 (95)	50 (189)	75 (284)	23/32”	9.20	21.5 (9.8)
	1-1/2”	57 (217)	114 (433)	171 (650)	1-3/32”	21.00	48.5 (22)
200/562 Series Valve	1/4”	3 (11)	6 (23)	9 (34)	1/4”	0.95	4.5 (2)
	1/2”	5 (19)	10 (38)	15 (57)	5/16”	1.60	8.5 (3.9)
	1”	9 (34)	19 (72)	28 (106)	7/16”	3.20	21.5 (9.8)

Technical Drawings

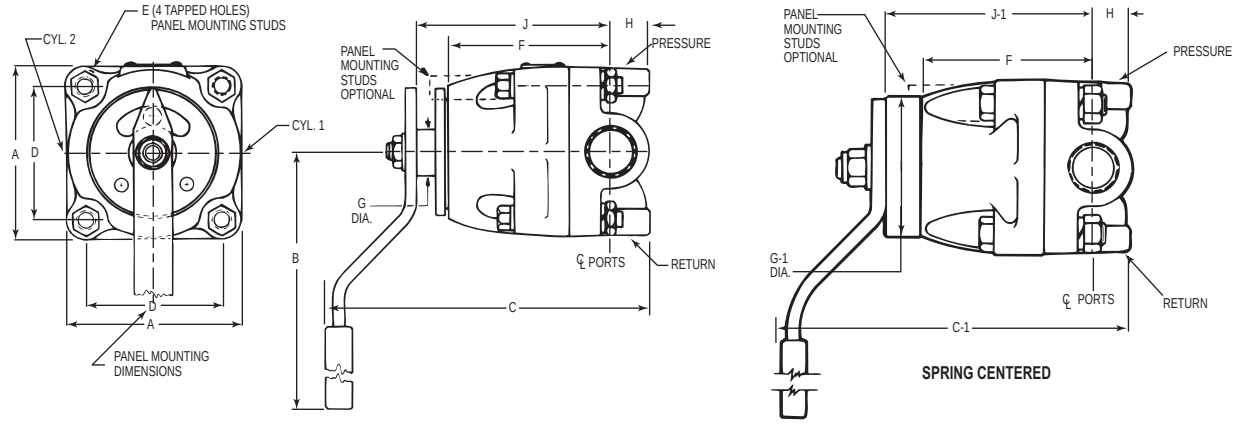

DIMENSIONS in inches (mm)

Port Size NPT	A	B	C	C-1	D	E	F	G Dia.	G-1 Dia.	H	J	J-1
1/4”	2.6 (66.0)	5 (127.0)	4.7 (119.4)	4.87 (124)	1.8 (48.3)	3/8 - 16 NC	2.6 (66.0)	0.7 (17.8)	1.9 (48.3)	0.6 (15.2)	2.9 (73.7)	3.1 (79.3)
3/8” & 1/2”	3.3 (83.8)	7.0 (177.8)	6.8 (173)	6.8 (173)	2.4 (61.0)	3/8 - 16 NC	3.5 (88.9)	1.1 (27.9)	2.6 (66.0)	0.7 (17.8)	4.0 (101)	3.9 (99.1)
3/4” & 1”	4.6 (116.8)	10.0 (254.0)	8.7 (221.0)	9.9 (251.5)	3.6 (91.4)	1/2 - 13 NC	4.8 (121.9)	1.3 (33.0)	3.6 (91.4)	1.0 (25.4)	5.2 (132.1)	6.4 (162.6)
1-1/2” *	6.8 (172.7)	12.0 (304.8)	10.5 (266.7)	11.8 (299.7)	5.3 (134.6)	3/4 - 10 NC	6.2 (157.5)	1.3 (33.0)	3.6 (91.4)	1.5 (38.1)	6.5 (165.1)	7.8 (198.1)

* 1 1/2” available in 140 and 920 Series only

Product Configurator

Example:	20	3	P	6	W	C	3		

Series

14	Basic 140 series valve (3,000 psi)
20	Basic 200 series valve (6,000 psi)
92	Basic 920 series valve (3,000 psi manipulator)
562	Basic 5620 series valve (6,000 psi manipulator)

Port Size

1	1/4” NPT ports
2	3/8” NPT ports (Series 140 & 920 only)
3	1/2” NPT ports
4	3/4” NPT ports (Series 140 & 920 only)
5	1” NPT ports
7	1-1/2” NPT ports (Series 140 & 920 only)

Port Location

R	Regular (side) porting
P	Panel mount with side porting

Pressure Range

3	3,000 psi lubricated water or hydraulic, 2,000 psi air (14 & 92 Series)
6	6,000 psi lubricated water or hydraulic, 4,000 psi air (20 & 562 Series)

Working Media

A	Air (pneumatic)
W	Lubricated water or hydraulic oil

Flow Pattern

C	Closed center (Series 140, 200)
O	Open center (tandem center) (Series 140, 200)
Q	Manipulator (float center) (Series 920, 5620)

Position

3	Three position

Options

-MC	Spring centering *
-MS	SAE Porting

* For 1” ported valve pressure rating 1,500 psi
Not available on 1-1/2” ported valves

Options

-	See Supplemental Guide for complete list

3211 Fruitland Avenue • Los Angeles, CA 90058 • ☎ 800-835-1060 • Fax: 323-589-3463 • www.barksdale.com

Barksdale CONTROL PRODUCTS

Subplate Mounted Heavy Duty Valve

Series 3760

Patent # 2.696.219

Features

- Original Shear-Seal® technology
- Convenient sub-plate manifold mounting
- Low pressure drop
- High velocity flow
- Tolerates contaminates
- Low handle load at high pressures

Applications

- Steel mills
- Shipboard hydraulic control systems
- Refineries and chemical processing plants
- Power generation facilities

General Specifications*

Working Pressure:	Hydraulic oil or lubricated water up to 4,500 psi (310 bar)
Flow Capacity, Cv:	See table
Back Pressure:	Must not exceed 250 psi (17.2 Bar) at return port for satisfactory operation
Pressure Drop:	14 psi (0.96 bar) at 20 ft/sec * See Supplemental Guide for more detailed information
Proof Pressure:	1-1/2 times working pressure except at return port
Burst Pressure:	2-1/2 times working pressure except at return port (3,000 psi [206 bar])
Media Temperature Range:	-40° to +250°F (-40° to +121°C)

Wetted Material:	
Rotor:	400 series stainless steel
Pressure Seals:	Stainless steel
Shaft:	Stainless steel
Body:	Bronze
Housing:	Ductile iron
Standard O-rings:	Buna N, others available
Back-up Rings:	Teflon®
Subplates: (Optional)	Carbon steel

* See product configurator for additional options.

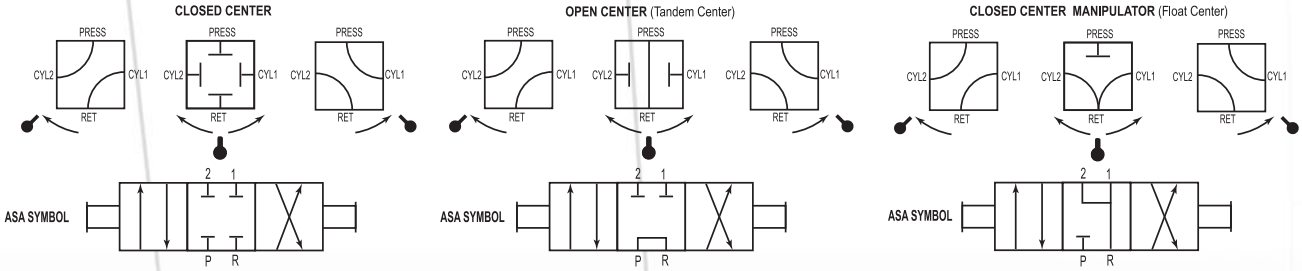

	Main Valve Port Size	Flow Capacity (Approx.) Service: Oil and Lubricated Water 20 ft/sec gpm (l/min)	40 ft/sec gpm (l/min)	60 ft/sec gpm (l/min)	Min. Flow Passage Dia.	Cv Factor	Approx. Shipping Weight lbs (kgs)
3760 Series Valve	1/2"	9 (34)	19 (72)	28 (106)	7/16"	3.20	8.5 (4.5)
	1"	25 (95)	50 (189)	75 (284)	23/32"	9.20	24 (10.9)
	1-1/2"	57 (217)	114 (433)	171 (650)	1-3/32"	21.00	53 (24)

Barksdale
CONTROL PRODUCTS
CRANE
Barksdale, Inc./Barksdale GmbH
A Subsidiary of Crane Co.

Technical Drawings

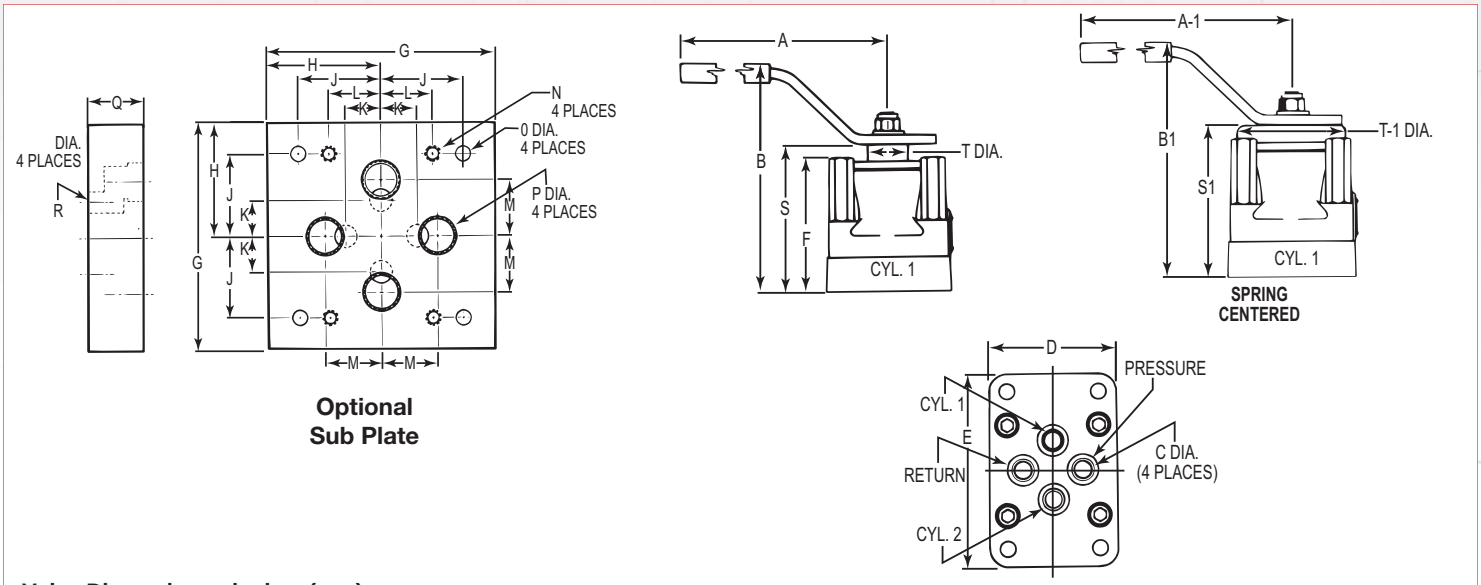

Optional
Sub Plate

Valve Dimensions - inches (mm)

Size	A	A-1	B	B-1	C	D	E	F	S	S-1	T	T-1
1/2"	7.00 (178)	9.00 (229)	5.81 (148)	6.06 (154)	0.47 (12)	3.44 (87)	5.44 (138)	3.56 (90)	3.94 (100)	4.06 (103)	1.06 (27)	2.63 (67)
1"	10.0 (254)	14.0 (356)	7.63 (194)	8.81 (224)	0.75 (19)	4.75 (121)	6.88 (175)	4.81(122)	5.13 (130)	6.19 (157)	1.25 (32)	3.56 (90)
1-1/2"	12.00 (305)	14.0 (356)	8.75 (222)	10.0 (254)	1.25 (32)	6.81 (173)	9.38 (238)	5.94 (151)	6.25 (159)	7.5 (191)	1.25 (32)	3.56 (90)

SubPlate Dimensions - inches (mm) Options:

Size	Port Type	Sub Plate p/n	G	H	J	K	L	M	N	O	P	Q	R	WT.
1/2"	NPT	**34013**	6.0 (152)	3.0 (76)	2.19 (56)	0.78 (20)	1.19 (30)	1.41 (36)	3/8 N.C.	0.41 (10)	1/2 NPT	1.25 (32)	0.44 (11)	11 3/4
	Socket Weld	**34011**	6.0 (152)	3.0 (76)	2.19 (56)	0.78 (20)	1.19 (30)	1.41 (36)	3/8 N.C.	0.41 (10)	.855 C'Bore	1.25 (32)	0.44 (11)	
1"	NPT	**34015**	8.0 (203)	4.0 (102)	2.88 (73)	1.25 (32)	1.81 (46)	1.97 (50)	1/2 N.C	0.53 (13)	1" NPT	2.0 (51)	0.72 (19)	32 1/2
	Socket Weld	**34012**	8.0 (203)	4.0 (102)	2.88 (73)	1.25 (32)	1.81 (46)	1.97 (50)	1/2 N.C	0.53 (13)	1.330 C'bore	2.0 (51)	0.72 (19)	
1-1/2"	NPT	**34016**	10.0 (254)	5.0 (127)	4.0 (102)	1.94 (49)	2.69 (68)	2.69 (68)	5/8 N.C.	0.53 (13)	1 1/2 NPT	2.0 (51)	1.22 (31)	49
	Socket Weld	**34014**	10.0 (254)	5.0 (127)	4.0 (102)	1.94 (49)	2.69 (68)	2.69 (68)	5/8 N.C.	0.53 (13)	1.915 C'bore	2.0 (51)	1.22 (31)	
2"	NPT	**34018**	10.0 (254)	5.0 (127)	4.0 (102)	1.94 (49)	2.69 (68)	2.69 (68)	5/8 N.C.	0.53 (13)	2" NPT	2.0 (51)	1.22 (31)	49
	Socket Weld	**34017**	10.0 (254)	5.0 (127)	4.0 (102)	1.94 (49)	2.69 (68)	2.69 (68)	5/8 N.C.	0.53 (13)	2.406 C'bore	2.0 (51)	1.22 (31)	

Product Configurator

Example:	376	5	M	3	W	C	3		

Series

376	Basic 376 series valve

Port Size

3	1/2" NPT ports
5	1" NPT ports
7	1-1/2" NPT ports

Style

M	Manifold porting

Pressure Range

3	3,000 psi lubricated water or hydraulic oil

Working Media

W	Lubricated water or hydraulic

Flow Pattern

C	Closed center
O	Open center (tandem center)
Q	Closed center manipulator

Position

3	3-position

Options

	See Supplemental Guide for complete list

Options

-MC	Spring centering *
-H	4,500 psi rated

* For 1" ported valve pressure rating 1,500 psi
Not available on 1-1/2" ported valves

3211 Fruitland Avenue • Los Angeles, CA 90058 • ☎ 800-835-1060 • Fax: 323-589-3463 • www.barksdale.com
Barksdale CONTROL PRODUCTS

Series II Valve

Models A14 and H14

Patent# US D521.598 S **Patent# US D521.599 S**

Features

- Original Shear-Seal® technology
- Integrated actuator
- 2- and 3-position
- Superior shifting performance
- High velocity flow
- Compact design
- Corrosion resistant materials

Applications

- Land-based & offshore oil drilling controls BOP control units
- Steel mills
- Shipboard hydraulic control systems
- Industrial hydraulic power units
- Refineries and chemical processing plants

General Specifications*

- Main Valve

Working Pressure:	Hydraulic up to 3,000 or 6,000 psi (206 bar or 413 bar) Air up to 4,000 psi (276 bar)
Flow Capacity, Cv:	See table
Back Pressure:	Must not exceed 250 psi (17.2 bar) at return port for satisfactory operation
Proof Pressure:	1-1/2 times working pressure except at return port
Burst Pressure:	2-1/2 times working pressure except at return port (3,000 psi [206 bar])
Pressure Drop (all Valves):	20 ft/s –14 psi; 6.1 m/s – 1 bar 40 ft/s – 58 psi; 12.2 m/s – 4.0 bar 60 ft/s – 130 psi; 18.3 m/s – 9.0 bar
Media Temperature Range:	-40° to +250°F (-40° to +121°C)
Wetted Materials: Standard O-Rings: Back-up Rings:	400 Series Stainless Steel Buna N Teflon®
Handle Detent:	All valves have 3-position detents for manual shift to Center position
Panel Mounting:	Standard for 1/4"- 1/2" valves Consult Factory for 3/4" & 1" valves

* See product configurator for additional options.

- Pilot Actuator

Working Pressure: Air: Hydraulic (2-position only):	 80 psi (5.2 bar) minimum 250 psi (17.2 bar) maximum 500 psi (34 bar) minimum 1,500 psi (103 bar) maximum
Porting:	1/4" NPT
Media Temperature Range:	-40° to +250°F (-40° to +121°C)
Speed of Operation:	Shift time for 90° must be 1/2 second minimum to avoid damage
Body, Housing, End Plate:	Al-Ni Bronze
Cylinder:	Amalga tubing (air) Stainless steel (hydraulic)
Shaft:	Stainless steel
Hardware:	Stainless steel
Handle:	Zinc plated alloy steel
Rotor, Seals:	400 series stainless steel

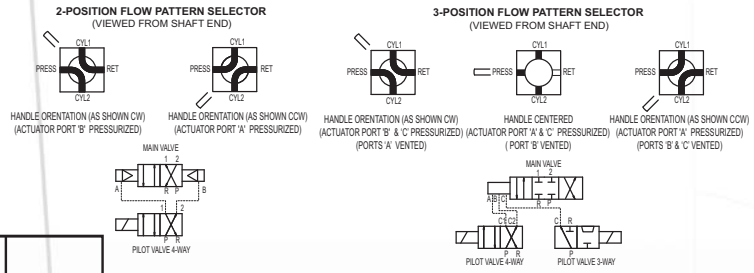

	Main Valve Port Size NPT	Flow Capacity (Approx.) Service: Oil and Lubricated Water 20 ft/sec gpm (l/min)	40 ft/sec gpm (l/min)	60 ft/sec gpm (l/min)	Min. Flow Passage Dia.	Cv Factor	Approx. Shipping Weight
14, 92 Series Valves	1/4"	3 (11)	6 (23)	9 (34)	1/4"	0.95	30
	3/8" & 1/2"	9 (34)	19 (72)	28 (106)	7/16"	3.20	35
	3/4" & 1"	25 (95)	50 (189)	75 (284)	23/32"	9.20	50
20, 562 Series Valves	1/4"	3 (11)	6 (23)	9 (34)	1/4"	0.95	30
	1/2"	5 (19)	10 (38)	15 (57)	5/16"	1.60	35
	1"	9 (34)	19 (72)	28 (106)	7/16"	3.20	50

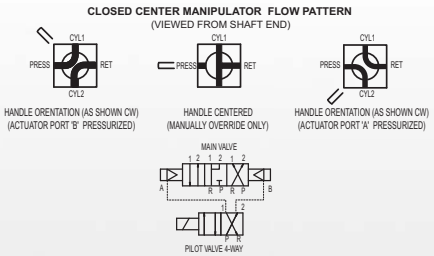

Barksdale
CONTROL PRODUCTS
CRANE
Barksdale, Inc./Barksdale GmbH
A Subsidiary of Crane Co.

Technical Drawings

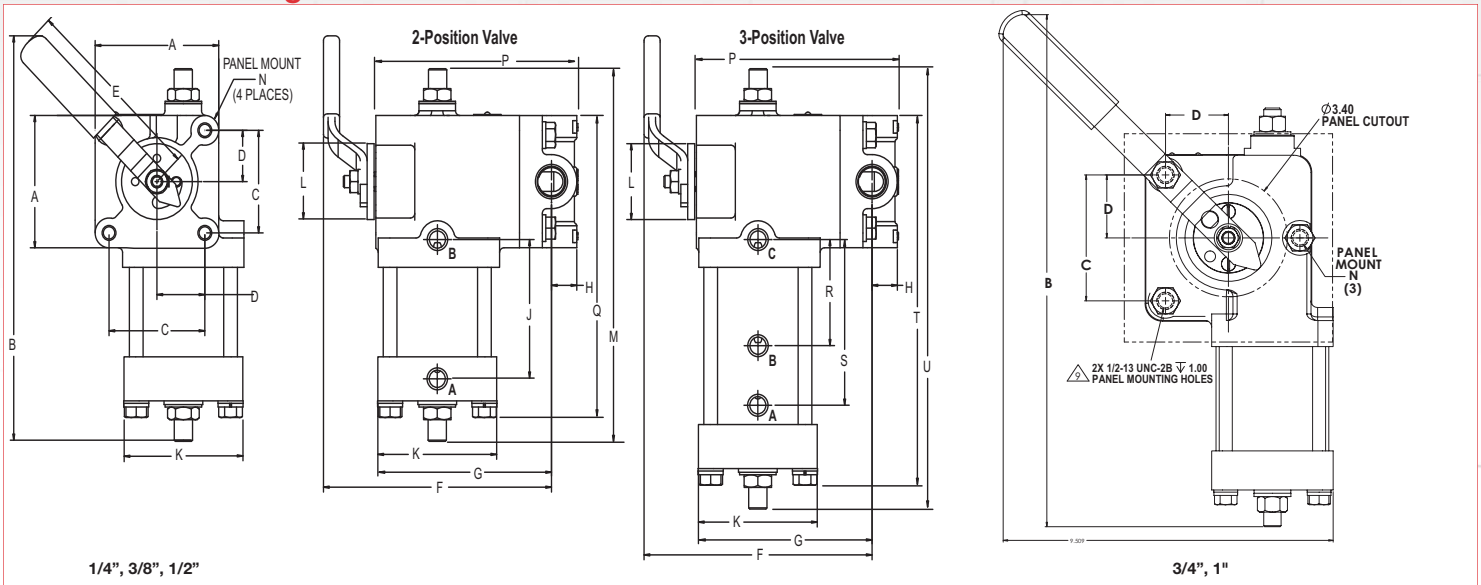

Porting	A	B	C	D	E	F	G	H	J	K	L	M	N	P	Q	R	S	T	U
1/4" NPT	2.75 (60.3)	10.38 (254.0)	2.0 (50.8)	1.0 (25.4)	5.0 (127.0)	5.72 (146.1)	4.25 (108)	.50 (12.7)	3.34 (85)	3.25 (82.6)	1.94 (49.2)	9.43 (231.7)	3/8-16UNC	4.88 (124.0)	7.44 (189.0)	2.44 (62)	3.75 (95.3)	8.44 (214.4)	10.468 (265.9)
3/8" & 1/2" NPT	3.406 (86.5)	10.937 (277.8)	2.625 (66.7)	1.312 (33.3)	5.0 (127.0)	6.25 (158.8)	4.75 (120.65)	.688 (17.46)	3.531 (89.7)	3.25 (82.6)	1.94 (49.2)	9.531 (242.1)	3/8-16UNC	5.50 (139.7)	7.85 (199.3)	2.56 (65.1)	3.88 (98.4)	8.688 (220.7)	10.25 (260.4)
3/4" & 1" NPT	4.781 (121.4)	14.375 (365.1)	3.625 (92)	1.812 (46)	9.0 (228.6)	8.75 (222.3)	6.562 (166.6)	1.0 (25.4)	4.25 (108)	3.50 (88.9)	3.0 (76.2)	12.0 (482.0)	1/2-13UNC	7.562 (192.0)	10.125 (257.0)	NA	NA	NA	NA

Product Configurator

Example:	A	20	3	R	6	W	C	3		

Actuator Media

A	Air cylinder
H	Hydraulic cylinder

Series

14	3,000 psi (206 bar), 4-way selector or diverter
20	6,000 psi (412 bar), 4-way selector or diverter
92	3,000 psi (206 bar), 4-way closed center manipulator
562	6,000 psi (412 bar), 4-way closed center manipulator
376	3,000 psi (206 bar), 4-way sub-plate mount

Port Size

1	1/4" NPT
2	3/8" NPT (14 and 92 series only)
3	1/2" NPT
4	3/4" NPT (14 and 92 series only)
5	1" NPT

Port Location

R	Regular side porting
M	Manifold porting (376 series only)

Pressure Range

3	3,000 psi lubricated water or hydraulic oil, 2,000 psi air (14, 92 & 376 Series)
6	6,000 psi lubricated water or hydraulic oil, 4,000 psi air (20 & 562 series)

Working Media

W	Lubricated water or hydraulic oil
A	Air or other gasses

Flow Pattern

C	Closed center
O	Open center (tandem center)
Q	Closed center manipulator Standard on 92 and 562 series Optional on 376 Series in closed center only Not available on 14 and 20 Series

Optional O-ring Material

-Zxx	See supplemental guide

Options

- B	Position Indicator
- C	3 x 2 converter
-H	4,500 psi working pressure
-M	5,000 psi working pressure
-D	Diverter flow pattern
-MS	SAE Porting
-Zxx	Optional O-ring material[1]

Position

2	2-position actuator, 90° rotation
3	3-position actuator

[1] See Supplemental Guide for the appropriate "Z number"

3211 Fruitland Avenue • Los Angeles, CA 90058 • ☎ 800-835-1060 • Fax: 323-589-3463 • www.barksdale.com
Barksdale CONTROL PRODUCTS

Explosion Proof Position Indicator

Model 371MT7

Reliable valve position feedback for Series II Valve

Features

- Fits all Series II valves
- 2 position and 3 position
- 30 VDC max, 500 mA (PLC compatible)
- Designed for Division I and I.S. use
- UL & ATEX approved
- NEMA 4X, IP67

Applications

- Valve status output
- BOP closing unit 'OPEN-CLOSE' signal
- Hydraulic power units

UL & ATEX approved

General Specifications*

Housing Material:	Stainless steel
Enclosure:	NEMA 4X, IP67
Electrical Rating:	30 VDC max, 500 mA (carry current)
Electrical Connection:	½" NPT rotating female conduit connection with 3 ft (36 in) cable
Electrical Cable:	UL listing, 4 conductors, 22 AWG TPE flame resistant jacket. Resistance to oils, fuels, and solvents
Maximum Contact Resistance:	100 milliohms
Dielectric:	100 megaohms minimum (@ 250 VDC)
Switch Type:	SPST

Approvals:	Division 1, Class 1, Groups A, B, C & D Ex d ia IIc T6 Intrinsically safe to 24 VDC, 50 mA, 10 W
Valve Position Feedback:	2-Way 3-Way
Operating Temperature:	-40 to +185°F (-40 to 85°C)
Installation Instructions:	- Connect electrical wires - Lightly lubricate the position indicator O-rings (2) - Fully insert switch into stop screw - Rotate position indicator for optimum cable exit - Secure set screws (2)
Weight:	2 lbs.

* See Product Configurator for additional options.

Wiring Code

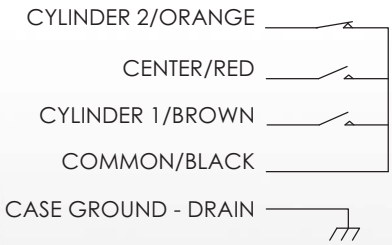

Barksdale
CONTROL PRODUCTS
CRANE
Barksdale, Inc./Barksdale GmbH
A Subsidiary of Crane Co.

Explosion Proof Position Indicator

Model 371MT7

Reliable valve position feedback for Series II Valve

Technical Drawings

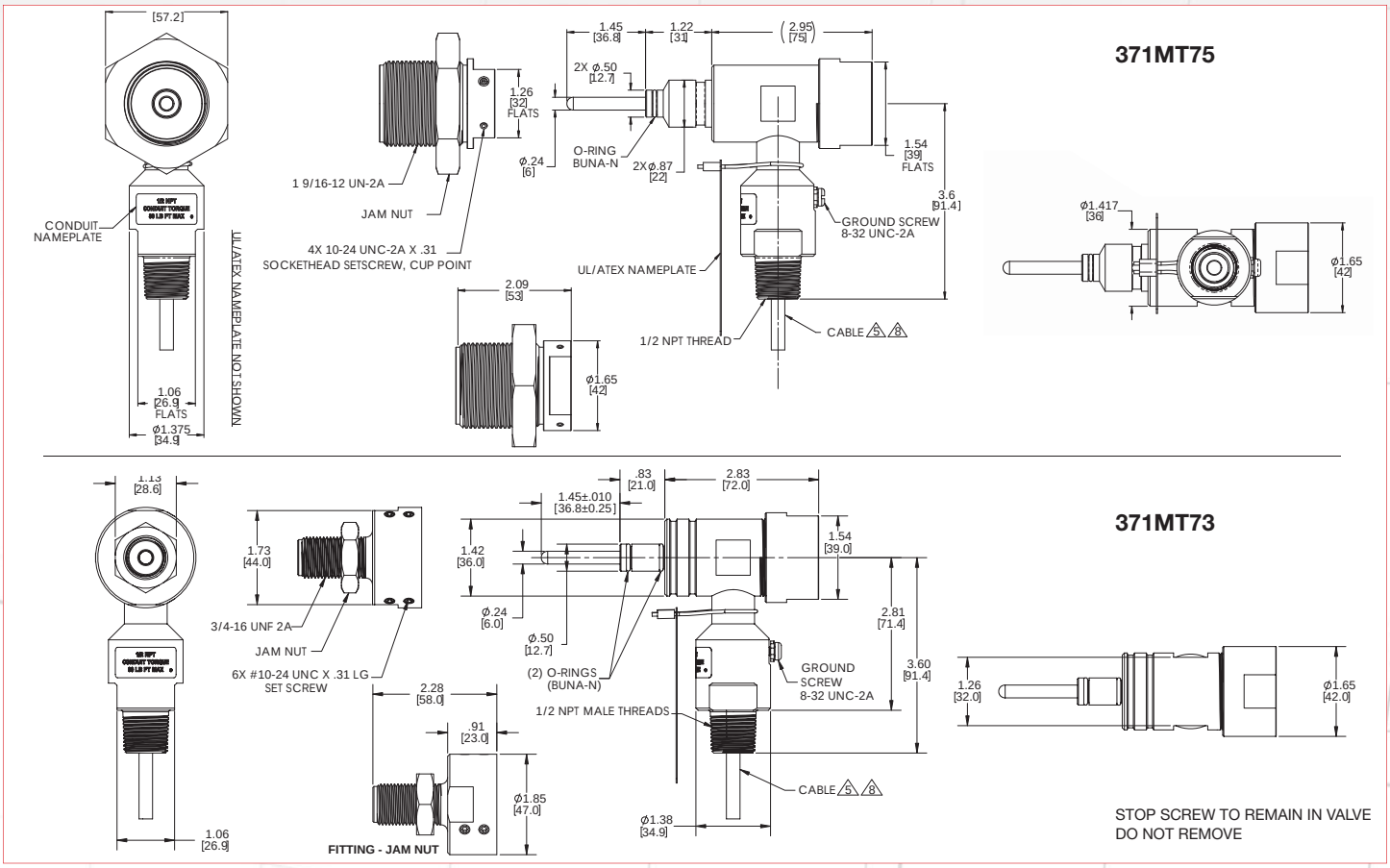

Product Configurator

When ordering together with Series II Valves

Example:	Series II Valve part number	-B	

Base Model

-B	Position indicator for ¼" and ½" Series II valves
-B	Position indicator for 1" and 1½" Series II valve

Optional Cable Length

XXX	Additional cable length (in inches)

When ordering separately as replacement or spare part

Example:	371MT7	3	

Base Model

371MT7	Position indicator

Size

3	Fits ¼" and ½" Series II valves
5	Fits 1" and 1-1/2" Series II valves

Optional Cable Length

-Wxxx	Additional cable length (in inches)

When ordering to retrofit existing valves without -B option

Example:	371MT73-KIT	

Size

371MT73-KIT	Fits ¼" and ½" Series II valves
371MT75-KIT	Fits 1" Series II valves

Optional Cable Length

-Wxxx	Additional cable length (in inches)

3211 Fruitland Avenue • Los Angeles, CA 90058 • ☎ 800-835-1060 • Fax: 323-589-3463 • www.barksdale.com

Barksdale CONTROL PRODUCTS

See Barksdale's Standard Conditions of Sale • Specifications are subject to modification at any time • Bulletin #B0053-C • 02/11 • ©2011 • Printed in the U.S.A.

High Pressure Valve

Series 4140

Features

- Original Shear-Seal® technology
- Stainless steel construction
- Low pressure drop
- High velocity flow
- Pressures to 15,000 psi
- Low handle load

Applications

- Offshore drilling equipment
- Refineries and chemical processing plants
- Gas compression systems
- Marine umbilical reels

General Specifications*

Working Pressure:	Standard to 10,000 psi (690 bar) Optional to 15,000 psi (1,034 bar) (on 1/4" model only)
Flow Capacity, Cv:	See table
Back Pressure:	Must not exceed 250 psi (17.2 bar) at return port for satisfactory operation
Pressure Drop:	14 psi (0.96 bar) at 20 ft/s
Proof Pressure:	1-1/2 times working pressure except at return port
Burst Pressure:	2-1/2 times working pressure except at return port (3,000 psi [206 bar]) maximum

Media Temperature Range:	-40° to +250°F (-40° to +121°C)
Rotor:	400 series stainless steel
Pressure Seals:	Stainless steel
Shaft:	Stainless steel
Body, Housing:	300 series stainless steel
Standard O-ring:	Buna N
Back-up Rings:	Teflon®

* See product configurator for additional options and Supplemental Guide for more detailed information.

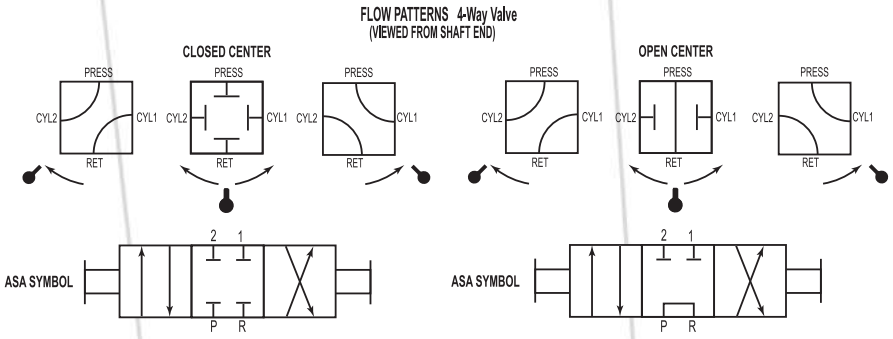

	Flow Capacity (Approx.) Service: Oil and Lubricated Water					
Main Valve Port Size	20 ft/sec gpm (l/min)	40 ft/sec gpm (l/min)	60 ft/sec gpm (l/min)	Min. Flow Passage Dia.	Cv Factor	Approx. Shipping Weight lbs (kgs)
1/4"	4 (15)	8 (30)	12 (45)	9/32"	0.95	13.5 (6.2)
1/2"	4 (15)	8 (30)	12 (45)	9/32"	0.95	13.5 (6.2)
1"	9 (34)	19 (72)	28 (106)	7/16"	3.20	29.5 (13.5)

Barksdale
CONTROL PRODUCTS
CRANE
Barksdale, Inc./Barksdale GmbH
A Subsidiary of Crane Co.

Technical Drawings

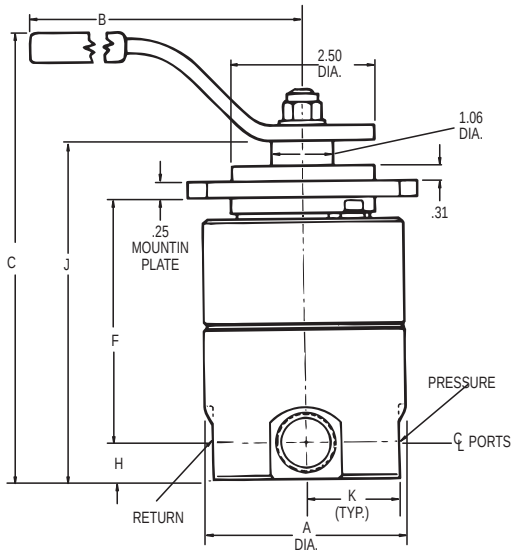

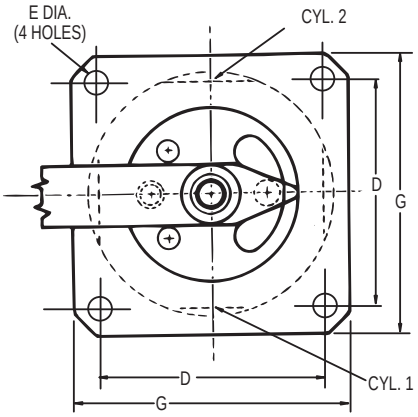

Port Size	A Dia.	B	C	D	E Dia.	F	G	H	J	K
1/4”	3.50 (89)	7.00 (178)	7.69 (195)	3.25 (83)	0.28 (7)	4.22 (107)	4.00 (102)	0.63 (16)	5.81(148)	1.63 (41)
1/2”	3.50 (89)	7.00 (178)	7.69 (195)	3.25 (83)	0.28 (7)	4.22 (107)	4.00 (102)	0.63 (16)	5.81(148)	1.63 (41)
1”	4.50 (114)	9.00 (229)	10.69 (272)	4.00 (102)	0.34 (9)	5.84 (148)	5.00 (127)	1.00 (25)	8.81(224)	2.03 (52)

Product Configurator

Example:	414	1	R	9	A	C	3	

Series

414	Basic 3 position 4 way

Port Size

1	1/4” NPT ports
3	1/2” NPT ports
5	1” NPT ports

Style

R	Regular (side) porting

Operating Pressure

9	10,000 psi

Service

A	Air, lubricated water or hydraulic oil

Flow Pattern

C	Closed center
O	Open center (tandem center)

Position

3	Three position

Options

-MC	Spring centering *
-MS	SAE Porting

* Not available on 1” ported valves

Microtorque™ Valve

518, 526 Series

Features

- Original Shear-Seal® technology
- Compact design
- Non-interflow option
- Spring return option
- Multiple handle types
- 2 or 3 position detent

Applications

- Work holding clamps and systems
- Hydraulic presses and lifting systems
- Hydraulic test equipment
- Grease injection equipment
- Hydraulic power units

General Specifications*

Media:	Hydraulic oil
Working Pressure:	6,000 psi (415 bar) **
Flow Capacity, Cv:	See table
Back Pressure:	Must not exceed 250 psi (17.2 bar)*** at return port for satisfactory operation
Proof Pressure:	1-1/2 times working pressure except at return port
Burst Pressure:	2-1/2 times working pressure except at return port
Media Temperature Range:	-40° to +250°F (-40° to +121°C)
Porting:	1/4" NPT, SAE for 1/4" tubing, or DO3 pattern for manifold mounting
Mounting:	Panel mountable with p/n 22357 mounting nut (-P option) DO3 Manifold mounting shipped with (4) #10-24 screws and O-Rings
Handle Rotation:	90°; 45° each side of center position

Detent: 2-position: 3-position:	 Detent at 90° positions Detents at center and 2 extreme positions
Optional Spring Return:	Available to center or either shifted position 5,000 psi (345 bar) max working pressure on spring return option
Body & Housing:	Anodized aluminum
Shaft, Rotor, Pressure Seals:	400 series stainless steel
Standard O-Rings:	Buna N, others available
Back-up Rings:	Teflon
Bearings:	Hardened steel
Shipping Weight:	.95 lbs

* See product configurator for additional options.
** Consult factory for pressure up to 10,000 psi (690 bar)
*** For requirements in excess of 250 psi (17.2 bar) at return port consult factory

CLOSED CENTER MANIPULATOR

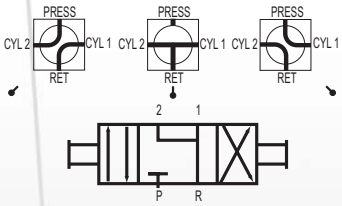

OPEN (TANDEM) CENTER

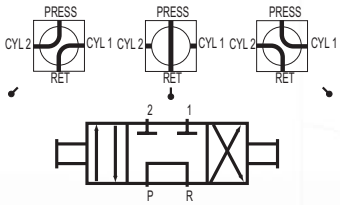

CLOSED CENTER

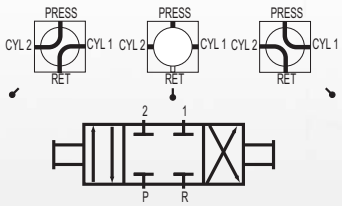

	Flow Capacity (Approx.)			
	20 ft/sec (6.1 m/s) gpm (l/min)	40 ft/sec (12.2 m/s) gpm (l/min)	Min. Flow Passage Dia.	Cv Factor
518 Series Interflow	1.4 (5.6)	2.8 (11)	0.17"	0.40
526 Series Non-Interflow	0.36 (1.4)	0.72 (2.7)	0.086"	0.09

Barksdale
CONTROL PRODUCTS
CRANE
Barksdale, Inc./Barksdale GmbH
A Subsidiary of Crane Co.

Technical Drawings

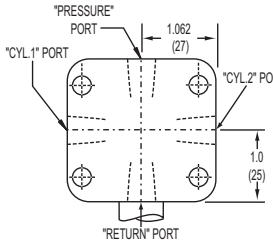

REGULAR (SIDE) PORTING

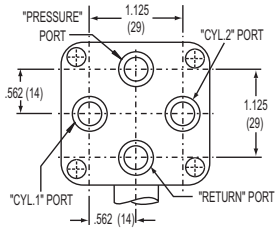

STRAIGHT (BOTTOM) PORTING

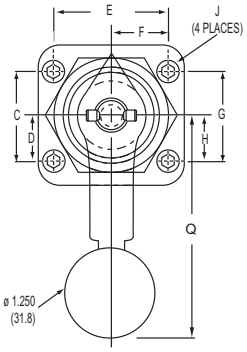

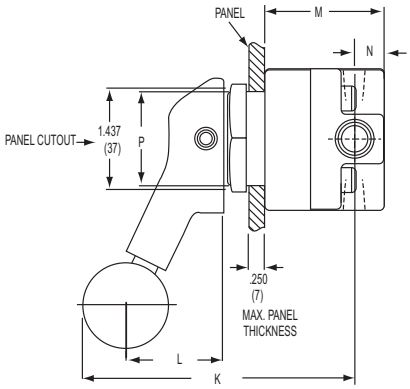

Regular and Straight Porting

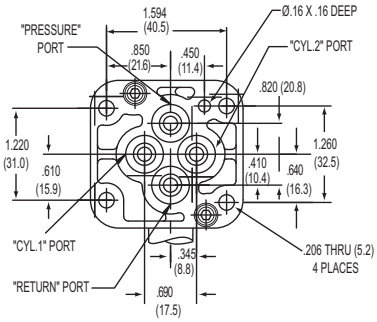

MANIFOLD PORTING
(Mounting per DO3 Spec)

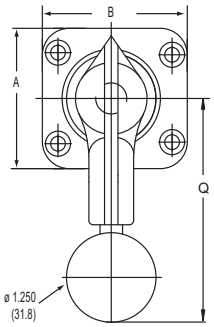

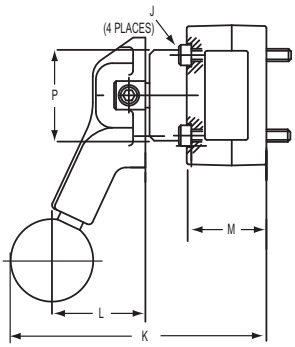

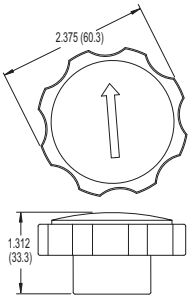

Optional Knob (-E)

Series	Porting	A	B	C	D	E	F	G	H	J	K	L	M	N	P	Q
518 or 526	21R , 61S Porting	1.968 (50.0)	2.031 (51.6)	1.281 (32.5)	.640 (16.3)	1.594 (40.5)	.850 (21.6)	1.219 (31.1)	.610 (15.5)	1/4-28 UNF	3.812 (96.8)	1.437 (36.5)	1.781 (45.2)	.437 (11.1)	1.375 (34.9)	3.125 (79.4)
	41M Manifold Porting	1.968 (50.0)	2.031 (51.6)							10-24 UNC	3.875 (98.4)	1.437 (36.5)	1.406 (29.0)		1.375 (34.9)	3.125 (79.4)
	Spring Return Option										5.562 (141.3)	2.500 (63.3)				5.437 (138.1)

Product Configurator

Example:	518	41M	6	H	C	3		

Series

518	Interflow
526	Non-interflow

Porting

21R	Regular (side) porting
41M	Manifold porting (D03)
61S	Straight (bottom) Porting

Pressure Range

6	6,000 psi

Working Media

H	Hydraulic oil

Flow Pattern

C	4-way closed center
O	4-way open center
M	4-way manipulator Closed center

Detent Position

2	2-position 90° rotation
3	3-position

Position

-Zxx	Optional O-ring material [2]

Options

-MC	Spring return to center [1]
-MR	Spring return to right (Pressure port to C1) [1]
-ML	Spring return to left (Pressure port to C2) [1]
-MS	SAE porting for 1/4" tubing
-E	Black knob (not available with spring return)
-P	Panel mounting nut p/n 22357

[1] 5,000psi max working pressure for spring return option
[2] See supplemental guide for the appropriate "Z number"

3211 Fruitland Avenue • Los Angeles, CA 90058 • ☎ 800-835-1060 • Fax: 323-589-3463 • www.barksdale.com
Barksdale CONTROL PRODUCTS

Shear-Seal® Directional Control — *Series 422 Solenoid Valve*

Features

- Original Shear-Seal® technology
- Explosion-Proof option
- Zero-leakage*
- Spring close with no power
- Flexible flow patterns
- Tolerates contaminates

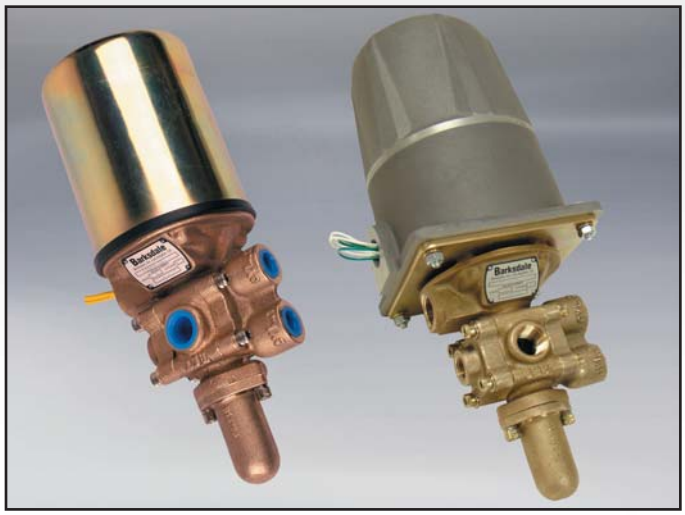

Applications

- Mining operations
- Offshore oil platforms
- Refineries and chemical processing plants
- Power generation facilities
- Air or hydraulic test equipment

General Specifications**

Working Pressure:	Air (pneumatic) up to 1,500 psi (103 bar) Hydraulic oil or lubricated water, up to 3,000 psi (206 bar)
Pressure Drop:	9 psi at 2.5 gpm 32 psi at 4 gpm (For more detailed pressure drop and flow capacity information, see valve supplemental guide)
Max. Fluid Velocity:	20ft/sec (6.1 m/sec)
Cv Factor:	0.7
Min. Flow Diameter:	7/32 in. (5.6mm)
Back Pressure:	Must not exceed 250 psi (17.2 bar) at return port for satisfactory operation
Proof Pressure:	1-1/2 times working pressure except at return port
Burst Pressure:	2-1/2 times working pressure except at return port (3000 psi [206 bar])
Media Temperature Range:	-40° to +250°F (-40° to +121°C)

Electrical Data: Solenoid Voltage:	115V AC at 60 Hz (Alternative AC & DC voltages are available).
Current - Inrush:	16.8 amps
Current - Holding:	1.52 amps
Voltage Tolerance:	±10% of rated voltage
Solenoid Rating:	Continuous duty
Material of Construction: Slide:	400 series stainless steel
Body & Pressure Fittings:	Bronze
Pressure Seals:	Stainless Steel
Standard O-Ring:	Buna N
Back-up Rings:	Teflon®
Shipping Weight:	11.5 Lbs. / Explosion-Proof 20 Lbs.

* Less than four cc per minute
** See product configurator for additional options.

Flow Pattern	4-Way	3-Way		Shut-Off		Diverter
		Norm. Open	Norm. Closed	Norm. Open	Norm. Closed	
*Plug Port Marked "X"	None	Cyl. 2	Cyl. 1	Ret. & Cyl. 2	Ret. & Cyl. 1	Ret.
Normal Position Spring Loaded	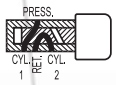			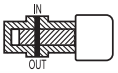	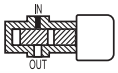	
Energized Position				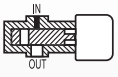	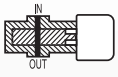	
ASA Symbol	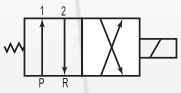	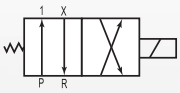	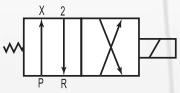	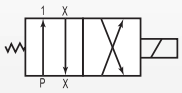	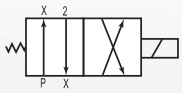	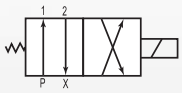

These Flow Patterns are obtainable from a single Standard Valve. Every valve is shipped with the necessary plugs
***To acheive the desired flow pattern, plug ports as shown.**

Barksdale
CONTROL PRODUCTS
CRANE
Barksdale, Inc./Barksdale GmbH
A Subsidiary of Crane Co.

Technical Drawings

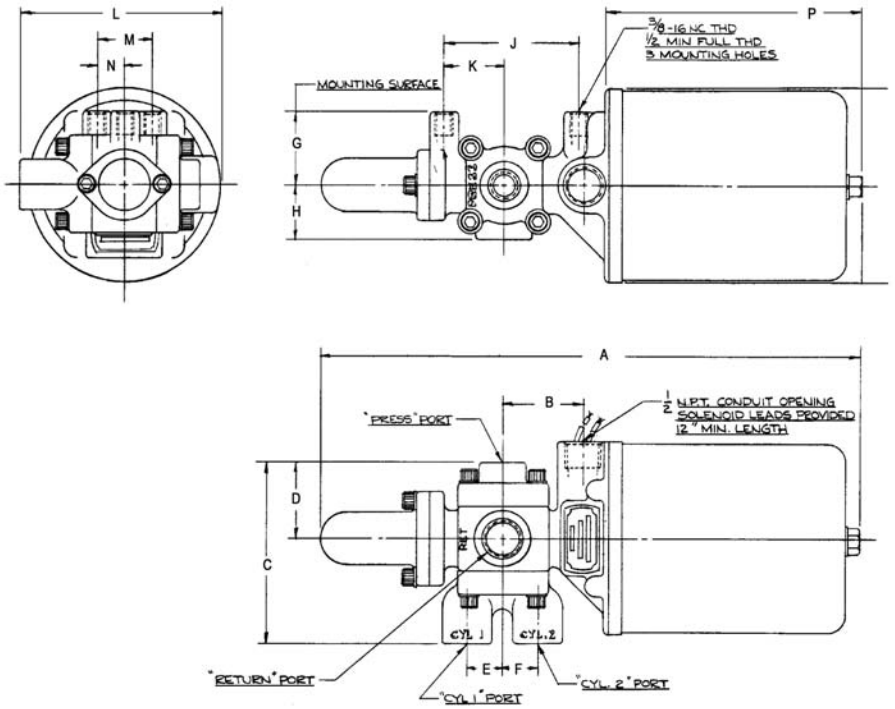

Porting: 3/8" NPT except return port 1/2" NPT

Solenoid	A	B	C	D	E	F	G	H	J	K	L	M	N	P
422	11.562 (293.7	1.312 (32.5)	3.875 (98.4)	1.625 (41.3)	.75 (19.1)	.75 (19.1)	1.50 (38.1)	1.156 (29.4)	2.875 (73.0)	1.281 (32.5)	4.125 (104.8)	1.187 (30.2)	.593 (15.1)	5.5 (138.7)
X422	14.437 (366.7)	3.593 (91.3)	3.875 (98.4)	1.625 (41.3)	.75 (19.1)	.75 (19.1)	1.50 (38.1)	1.156 (29.4)	2.875 (73.0)	1.281 (32.5)	5.00 (127)	1.187 (30.2)	.593 (15.1)	8.375 (212.7)

Product Configurator

Example:		422S3WS2A1

Prefix

X	Explosion-proof solenoid cover (optional)

Part Number

422S3WS2A1	Oil or lubricated water, 3,000 psi max, 115V AC
422S3AS2A1	Air , 1,500 psi, 115V AC

Alternative voltage and DC Solenoids are available. Consult factory for more detail

1/2” Heavy Duty Hydraulic Regulator

Series 20313

Features

- Original Shear-Seal® technology
- Self adjusting
- High flow capacity
- Tolerates contaminated media
- Fail-safe motor control options

Applications

- BOP Control Units
- Coiled tube reels
- Oil and gas systems
- Pressure sensitive applications

General Specifications*

Pressure:	
Supply/Inlet Pressure:	5,000 psi (345 bar)
Regulated Pressure Range:	
High Sensitivity	300 - 1600 psi (21 -110 bar)
Full Range	300 - 3000 psi (21 - 207 bar)
Regulated Pressure Range “F” Prefix Pneumatic failsafe motor:	
High Sensitivity	300 - 1600 psi (21 -110 bar)
Full Range	300 - 3000 psi (21 - 207 bar)
Regulated Pressure Range “G” Prefix Hydraulic failsafe motor:	
High Sensitivity	300 - 1600 psi (21 -110 bar)
Full Range	300 - 3000 psi (21 - 207 bar)
Fluid Temperature Range:	-40° to +250°F (-40° to +121° C)
Proof Pressure:	7,500 psi (517 bar)
Flow:	
Flow Rate:	45 GPM (@ 50/ft/s)
Cv Inlet:	6.7
Cv Vent:	6.7
Porting:	
Inlet:	1/2” NPT Standard, SAE Option
Outlet:	1/2” NPT Standard, SAE Option
Vent:	1/2” NPT Standard, SAE Option
Bleed Port:	1/4” Dia. hole

Materials of Construction:	
Body:	Stainless Steel (standard)
Flanges:	Carbon Steel (standard) Option: Stainless steel
Spring Tower Housing:	
Manual:	Phosphate coated alloy steel (std.)
Pneumatic Motor model:	Phosphate coated alloy steel (std.)
Hydraulic Motor model:	Phosphate coated alloy steel (std.) Option: Stainless Steel
Standard O’ring Material:	Buna N
Socket Head Screws:	Zinc plated alloy steel (standard) Option: Stainless steel
Wetted Parts:	Stainless steel & bronze
Pneumatic Pilot Motor (“F” prefix):	
Pilot Motor Working Pressure:	80 - 120 psi (5.5 - 8.3 bar)
Porting:	1/4” NPT
Operating Temperature Range:	32° to +250°F (0° to +120°C)
Hydraulic Pilot Motor (“G” prefix):	
Pilot Motor Working Pressure:	400 - 1600 PSI (6.9 - 110 bar)
Porting:	SAE for 3/8” Tube (Size -6)
Operating Temperature Range:	-40° to +250°F (-40° to +121°C)
Approximate Shipping Weight:	
Manual:	21 lbs. (9.5 kg)
Pneumatic or Hydraulic Motor:	44 lbs. (20.0 kg)

* See product configurator for additional options.

Barksdale
CONTROL PRODUCTS
CRANE Barksdale, Inc./Barksdale GmbH
A Subsidiary of Crane Co.

Technical Drawings

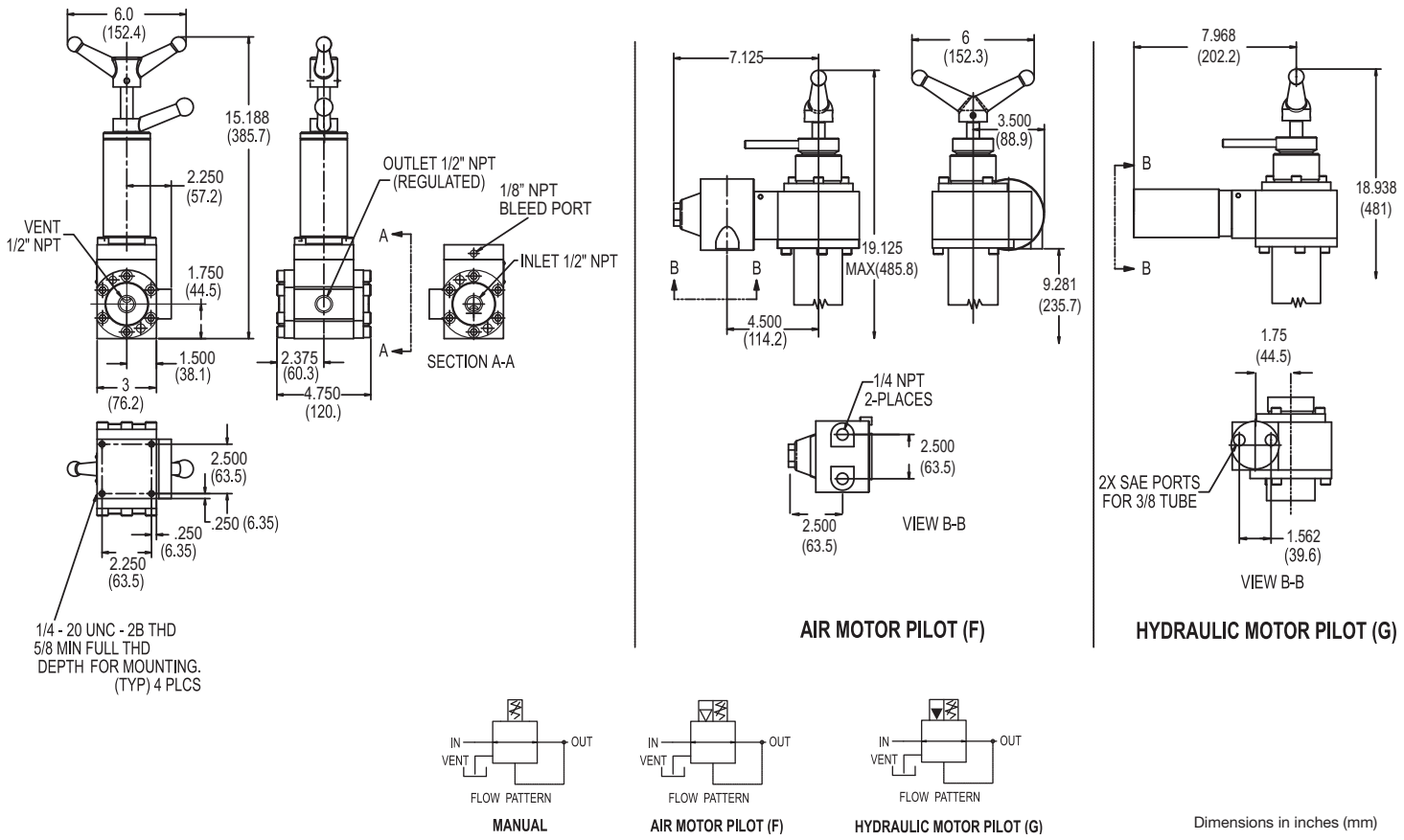

Product Configurator

Example:		20313S6WQ2		

Option

Blank	NPT porting
-MS	SAE porting
-SS	Stainless Steel Flanges & Trim

Adjustment Method

Blank	Manual
F	Pneumatic motor
G	Hydraulic motor

Regulated Pressure Range (Manual)

Blank	High sensitivity	300 - 1600 psi (21 -110 bar)
-1	Full range	300 - 3000 psi (21 - 207 bar)

Regulated Pressure Range (Failsafe) (F or G models)

Blank	High sensitivity	300 - 1600 psi (21 -110 bar)
-1	Full range	300 - 3000 psi (21 - 207 bar)

Series

20313S6WQ2	1/2” Shear-Seal Regulator

3/4” Hydraulic Regulator

Series 20415

Features

- Original Shear-Seal® technology
- Self adjusting
- High flow capacity
- Tolerates contaminated media
- Fail-safe motor control options
- Self venting

Applications

- Coiled tube reels
- Land-based oil drilling controls
- BOP control units

General Specifications*

Pressure:	
Supply/Inlet Pressure:	3,000 psi (207bar)
Regulated Pressure Range:	
High Sensitivity	500 - 1600 PSI (34 -110 bar)
Full Range	500 - 2800 PSI (34 - 193 bar)
Regulated Pressure Range “F” Prefix Pneumatic failsafe motor:	
High Sensitivity	500 - 1600 PSI (34 -110 bar)
Full Range	500 - 2800 PSI (34 - 193 bar)
Regulated Pressure Range “G” Prefix Hydraulic failsafe motor:	
High Sensitivity	500 - 1600 PSI (34- 110 bar)
Full Range	500 - 2800 PSI (34 - 193 bar)
Fluid Temperature Range:	-40° to +250°F (-40° to +121°C)
Proof Pressure:	4,500 PSI (310 bar)
Flow:	
Flow Rate:	70 GPM (@ 50 ft/s)
Cv Inlet:	9.8
Cv Vent:	0.6
Porting:	
Inlet 1:	1” NPT Standard, SAE Optional
Outlet (regulated):	1” NPT Standard, SAE Optional
Vent:	1/2” NPT Standard, SAE Optional
Gauge Port:	3/8” NPT Standard, SAE Optional

* See product configurator for additional options.

Materials of Construction:	
Body:	Phosphate coated alloy steel (std.) Option: Stainless steel
Flanges:	Phosphate coated alloy steel (std.) Option: Stainless steel
Spring Tower:	
Manual	Phosphate coated alloy steel (std.)
Pneumatic Motor model	Painted alloy steel (std.)
Hydraulic Motor model	Painted alloy steel (std.) Option: Stainless steel
Standard O’ring Material:	Buna N
Socket Head Screws:	Zinc plated alloy steel (std.) Option: Stainless steel
Wetted Parts:	Stainless steel & bronze
Pneumatic Pilot Motor (“F” prefix):	
Pilot Motor Working Pressure:	80 - 120 PSI (5.5 - 8.3 bar)
Porting:	1/4” NPT
Operating Temperature Range:	32° to +250°F (0° to +120°C)
Hydraulic Pilot Motor (“G” prefix):	
Pilot Motor Working Pressure:	400 - 1600 PSI (6.9 - 110 bar)
Porting:	SAE for 3/8” Tube (Size -6)
Operating Temperature Rating:	-40° to +250°F (-40° to +121°C)
Approximate Shipping Weight:	
Manual:	47 lbs. (21.3 kg)
Pneumatic or Hydraulic Motor:	70 lbs. (31.8 kg)

Barksdale
CONTROL PRODUCTS
CRANE Barksdale, Inc./Barksdale GmbH
A Subsidiary of Crane Co.

Technical Drawings

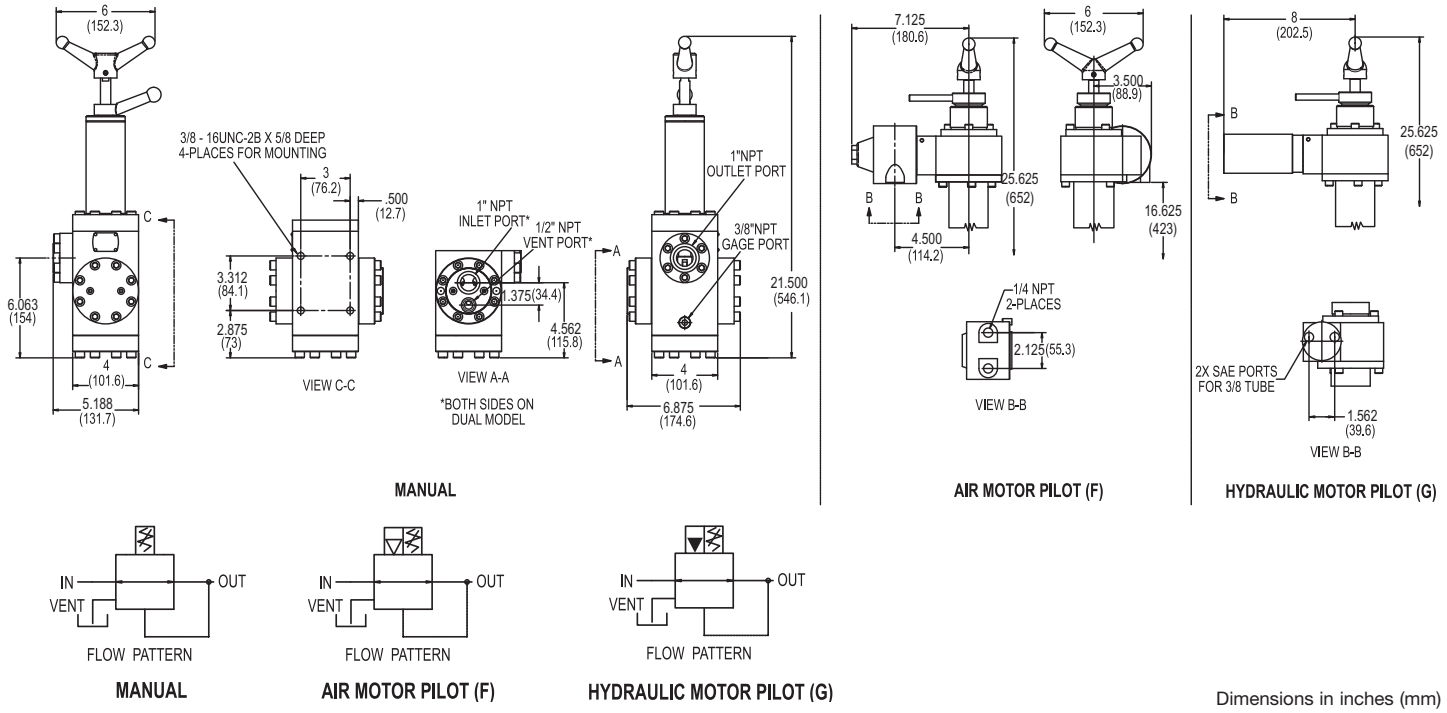

Dimensions in inches (mm)

Product Configurator

Example:		20415S3WQ2		

Adjustment Method

Blank	Manual
F	Pneumatic failsafe motor
G	Hydraulic failsafe motor

Series

20415S3WQ2	1” Pressure regulator

Option

Blank	NPT porting
-MS	SAE porting
-SS	Stainless steel flanges & trim

Regulated Pressure Range (Manual)		
Blank	High sensitivity	500 - 1600 psi (34 - 110 bar)
-1	Full range	500 - 2800 psi (34 - 193 bar)

Regulated Pressure Range (Failsafe) F & G Models		
Blank	High sensitivity	500 - 1600 psi (34 - 110 bar)
-1	Full range	500 - 2800 psi (34 - 193 bar)

3/4” Heavy Duty Hydraulic Regulator

Series 20495

Features

- Original Shear-Seal® technology
- Ultra flow regulator
- API compliant for sensitivity
- Fail-safe motor control options
- Tolerates contaminated media
- Self venting
- Surge dampening

API Compliant

Applications

- Coiled tube reels
- Land-based and offshore oil drilling controls
- Wireline service tractors
- Pressure sensitive applications

General Specifications*

Pressure:	
Supply/Inlet Pressure:	5,000 psi (345 bar)
Regulated Pressure Range:	
High Sensitivity	500 - 1800 PSI 34 - 124 bar)
Full Range	500 - 3300 PSI (34 - 228 bar)
Regulated Pressure Range “F” Prefix Pneumatic failsafe motor:	
High Sensitivity	500 - 1800 PSI (34 - 124 bar)
Full Range	500 - 3000 PSI (34 -207 bar)
Regulated Pressure Range “G” Prefix Hydraulic failsafe motor:	
High Sensitivity	500 - 1800 PSI (34 - 124 bar)
Full Range	500 - 3000 PSI (34 - 207 bar)
Fluid Temperature Range:	-40° to +250°F (-40° to +121°C)
Proof Pressure:	7,500 psi (517 bar)
Flow:	
Flow Rate:	90 GPM (@ 50 ft/s)
Cv Inlet:	9.8
Cv Vent:	0.7
Porting:	
Inlet 1:	1” NPT Standard, SAE Optional
Outlet (regulated):	1” NPT Standard, SAE Optional
Vent:	1/2” NPT Standard, SAE Optional
Gauge Port:	3/8” NPT Standard, SAE Optional

Materials of Construction:	
Body:	Stainless steel (standard)
Flanges:	Phosphate coated alloy steel (std.) Option: Stainless steel
Spring Tower:	
Manual	Phosphate coated alloy steel (std.)
Pneumatic Motor model	Painted alloy steel (std.)
Hydraulic Motor model	Painted alloy steel (std.) Option: Stainless steel
Standard O’ring Material:	Buna N
Socket Head Screws:	Zinc plated alloy steel (std.) Option: Stainless steel
Wetted Parts:	Stainless steel & bronze
Pneumatic Pilot Motor (“F” prefix):	
Pilot Motor Working Pressure:	80 - 120 PSI (5.5 - 8.3 bar)
Porting:	1/4” NPT
Operating Temperature Range:	32° to +250°F (0° to +120°C)
Hydraulic Pilot Motor (“G” prefix):	
Pilot Motor Working Pressure:	400 - 1600 PSI (6.9 - 110 bar)
Porting:	SAE for 3/8” Tube (Size -6)
Operating Temperature Rating:	-40° to +250°F (-40° to +121°C)
Approximate Shipping Weight:	
Manual:	47 lbs. (21.3 kg)
Pneumatic or Hydraulic Motor:	70 lbs. (31.8 kg)

* See product configurator for additional options.

Barksdale
CONTROL PRODUCTS
CRANE Barksdale, Inc./Barksdale GmbH
A Subsidiary of Crane Co.

Technical Drawings

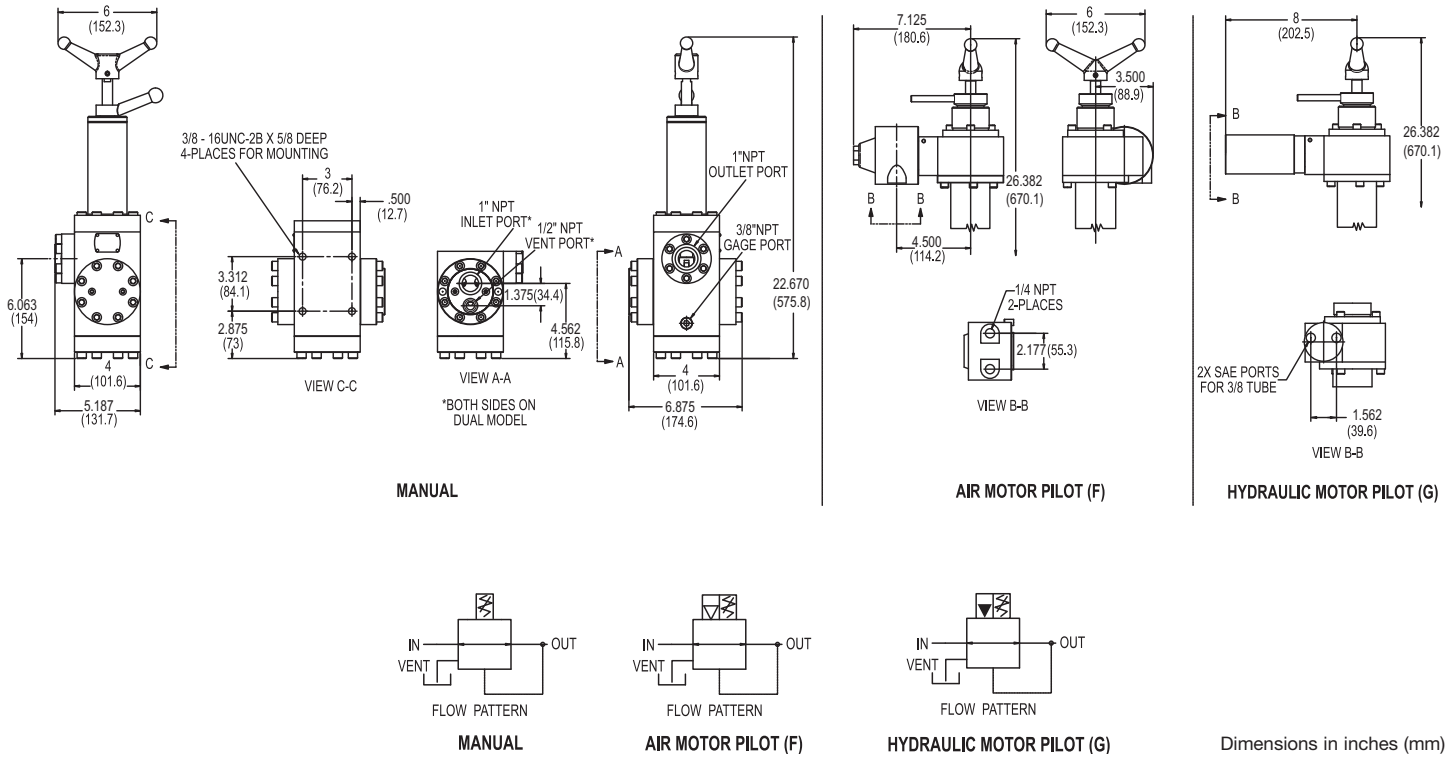

Dimensions in inches (mm)

Product Configurator

Example:		20495S6WQ2		

Adjustment Method

Blank	Manual
F	Pneumatic failsafe motor
G	Hydraulic failsafe motor

Series

20495S6WQ2	1” Pressure regulator

Option

Blank	NPT porting
-MS	SAE porting
-SS	Stainless steel flanges & trim

Regulated Pressure Range (Manual)		
Blank	High sensitivity	500 - 1800 psi (34 - 124 bar)
-1	Full range	500 - 3300 psi (34 - 228 bar)

Regulated Pressure Range (Failsafe) F & G Models		
Blank	High sensitivity	500 - 1800 psi (34 - 124 bar)
-1	Full range	500 - 3000 psi (34 - 207 bar)

3211 Fruitland Avenue • Los Angeles, CA 90058 • ☎ 800-835-1060 • Fax: 323-589-3463 • www.barksdale.com

1-½” Hydraulic Regulator

Series 20517

Features

- Original Shear-Seal® technology
- High flow capacity
- Large pressure range
- Tolerates contaminated media
- Fail-safe motor control options
- Self venting

Applications

- Land-based hydraulic drilling controls
- BOP control units
- Hydraulic powered tube reels

General Specifications*

Pressure:	
Supply/Inlet Pressure:	3,000 psi (207 bar)
Regulated Pressure Range:	
High Sensitivity	200 - 1600 PSI (14 -110 bar)
Full Range	350 - 2800 PSI (24 - 193 bar)
Regulated Pressure Range “F” Prefix Pneumatic failsafe motor:	
High Sensitivity	200 - 1600 PSI (14 - 110 bar)
Full Range	350 - 2800 PSI (24 - 193 bar)
Regulated Pressure Range “G” Prefix Hydraulic failsafe motor:	
High Sensitivity	200 - 1600 PSI (14 -110 bar)
Full Range	350 - 2800 PSI (24 - 193 bar)
Fluid Temperature Range:	-40° to +250°F (-40° to +121°C)
Proof Pressure:	4,500 psi (310 bar)
Flow:	
Flow Rate:	120 GPM (@ 50 ft/s)
Cv Inlet:	17.5
Cv Vent:	1.6
Porting:	
Inlet 1:	1” NPT Standard, SAE Optional
Inlet 2:	1” NPT Standard, SAE Optional
Outlet:	1-1/2” NPT Standard, SAE Optional
Vent:	1” NPT Standard, SAE Optional

* See product configurator for additional options.

Materials of Construction:	
Body:	Phosphate coated alloy steel (std.) Option: Stainless steel
Flanges:	Phosphate coated alloy steel (std.) Option: Stainless steel
Spring Tower:	
Manual:	Stainless steel (std.)
Pneumatic Motor model:	Painted alloy steel (std.)
Hydraulic Motor model:	Painted alloy steel (std.) Option: Stainless steel
Standard O’ring Material:	Buna N
Socket Head Screws:	Stainless steel (std.)
Wetted Parts:	Stainless steel & bronze
Pneumatic Pilot Motor (“F” prefix):	
Pilot Motor Working Pressure:	80 - 120 PSI (5.5 - 8.3 bar)
Porting:	1/4” NPT
Operating Temperature Range:	32° to +250°F (0° to +120°C)
Hydraulic Pilot Motor (“G” prefix):	
Pilot Motor Working Pressure:	400 - 1600 PSI (6.9 - 110 bar)
Porting:	SAE for 3/8” Tube (Size -6)
Operating Temperature Rating:	-40° to +250°F (-40° to +121°C)
Approximate Shipping Weight:	
Manual:	67 lbs. (30.4 kg)
Pneumatic or Hydraulic Motor:	90 lbs. (40.8 kg)

Barksdale
CONTROL PRODUCTS
CRANE Barksdale, Inc./Barksdale GmbH
A Subsidiary of Crane Co.

Technical Drawings

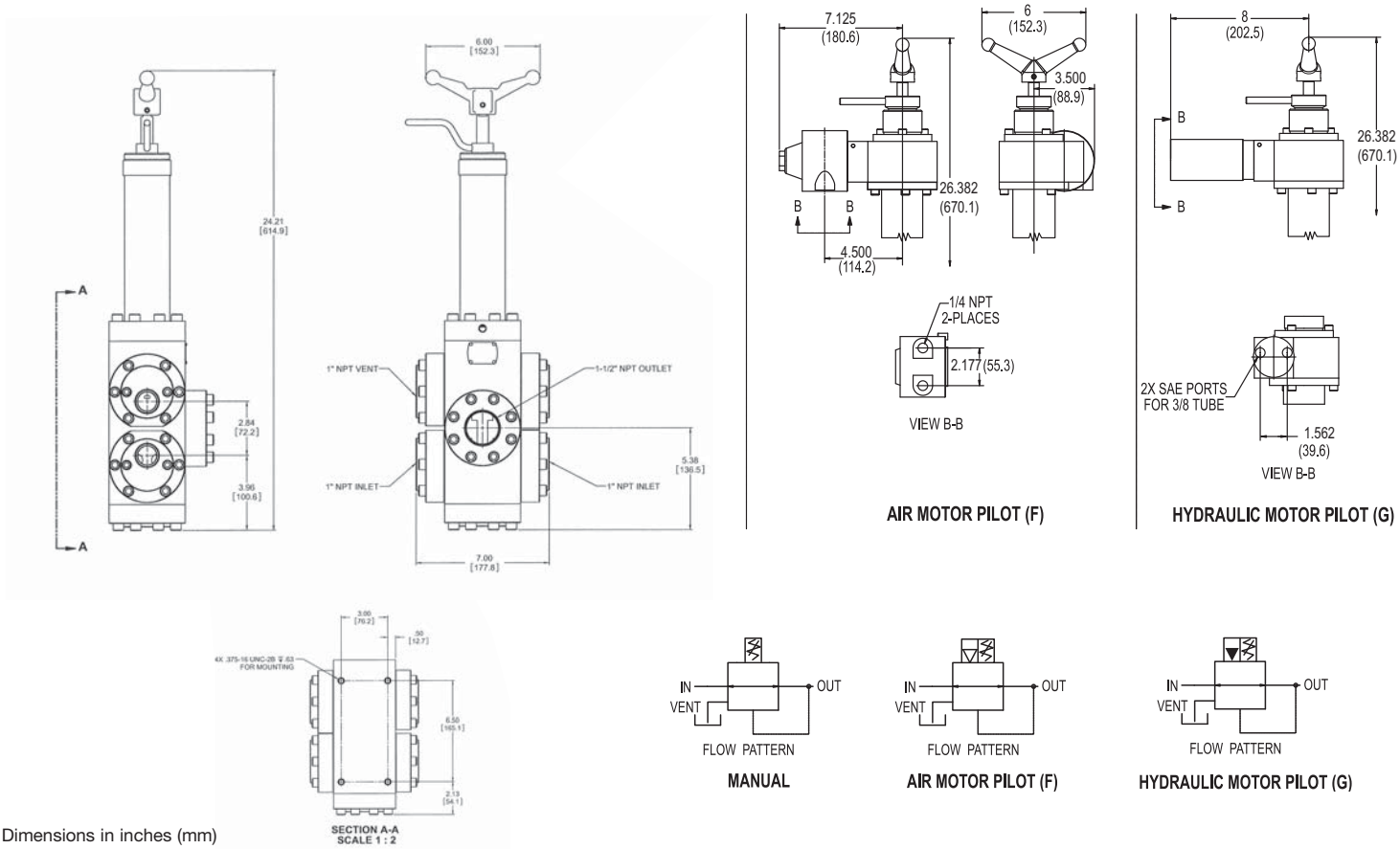

Dimensions in inches (mm)

Product Configurator

Example:		20517S3WQ2		

Adjustment Method

Blank	Manual
F	Pneumatic failsafe motor
G	Hydraulic failsafe motor

Series

20517S3WQ2	1-1/2” Pressure regulator

Option

Blank	NPT porting
-MS	SAE porting
-SS	Stainless steel flanges & trim

Regulated Pressure Range (Manual)		
Blank	High sensitivity	200 - 1600 psi (14 - 110 bar)
-1	Full range	350 - 2800 psi (24 - 193 bar)

Regulated Pressure Range (Failsafe) F & G Models		
Blank	High sensitivity	200 - 1600 psi (14 - 110 bar)
-1	Full range	350 - 2800 psi (24 - 193 bar)

3211 Fruitland Avenue • Los Angeles, CA 90058 • ☎ 800-835-1060 • Fax: 323-589-3463 • www.barksdale.com

1-½” Heavy Duty Hydraulic Regulator

Series 20597

Features

- Original Shear-Seal® technology
- API compliant for sensitivity
- High flow capacity
- Large pressure range
- Tolerates contaminated media
- Fail-safe motor control options
- Self venting
- Surge dampening

API Compliant

Applications

- Land-based and offshore oil drilling controls
- BOP control units
- Pressure sensitive equipment

General Specifications*

Pressure:	
Supply/Inlet Pressure:	5,000 psi (345 bar)
Regulated Pressure Range:	
High Sensitivity	300 - 1600 psi (21 -110 bar)
Full Range	500 - 3300 psi (34 - 228 bar)
Regulated Pressure Range “F” Prefix Pneumatic failsafe motor:	
High Sensitivity	300 - 1600 psi (21 - 110 bar)
Full Range	500 - 3000 psi (34 - 207 bar)
Regulated Pressure Range “G” Prefix Hydraulic failsafe motor:	
High Sensitivity	300 - 1600 psi (21 -110 bar)
Full Range	500 - 3000 psi (34 - 207 bar)
Fluid Temperature Range:	-40° to +250°F (-40° to +121°C)
Proof Pressure:	7,500 psi (517 bar)
Flow:	
Flow Rate:	120 GPM (@ 50 ft/s)
Cv Inlet:	17.5
Cv Vent:	2.6
Porting:	
Inlet 1:	1” NPT Standard, SAE Optional
Inlet 2:	1” NPT Standard, SAE Optional
Outlet:	1-1/2” NPT Standard, SAE Optional
Vent:	1” NPT Standard, SAE Optional

Materials of Construction:	
Body:	Stainless steel (std.)
Flanges:	Phosphate coated alloy steel (std.) Option: Stainless steel
Spring Tower:	
Manual:	Stainless steel (std.)
Pneumatic Motor model:	Painted alloy steel (std.)
Hydraulic Motor model:	Painted alloy steel (std.) Option: Stainless steel
Standard O’ring Material:	Buna N
Socket Head Screws:	Stainless steel (std.)
Wetted Parts:	Stainless steel
Pneumatic Pilot Motor (“F” prefix):	
Pilot Motor Working Pressure:	80 - 120 psi (5.5 - 8.3 bar)
Porting:	1/4” NPT
Operating Temperature Range:	32° to +250°F (0° to +120°C)
Hydraulic Pilot Motor (“G” prefix):	
Pilot Motor Working Pressure:	400 - 1600 psi (6.9 - 110 bar)
Porting:	SAE for 3/8” Tube (Size -6)
Operating Temperature Rating:	-40° to +250°F (-40° to +121°C)
Approximate Shipping Weight:	
Manual:	67 lbs. (30.4 kg)
Pneumatic or Hydraulic Motor:	90 lbs. (40.8 kg)

* See product configurator for additional options.

Barksdale
CONTROL PRODUCTS
CRANE Barksdale, Inc./Barksdale GmbH
A Subsidiary of Crane Co.

Technical Drawings

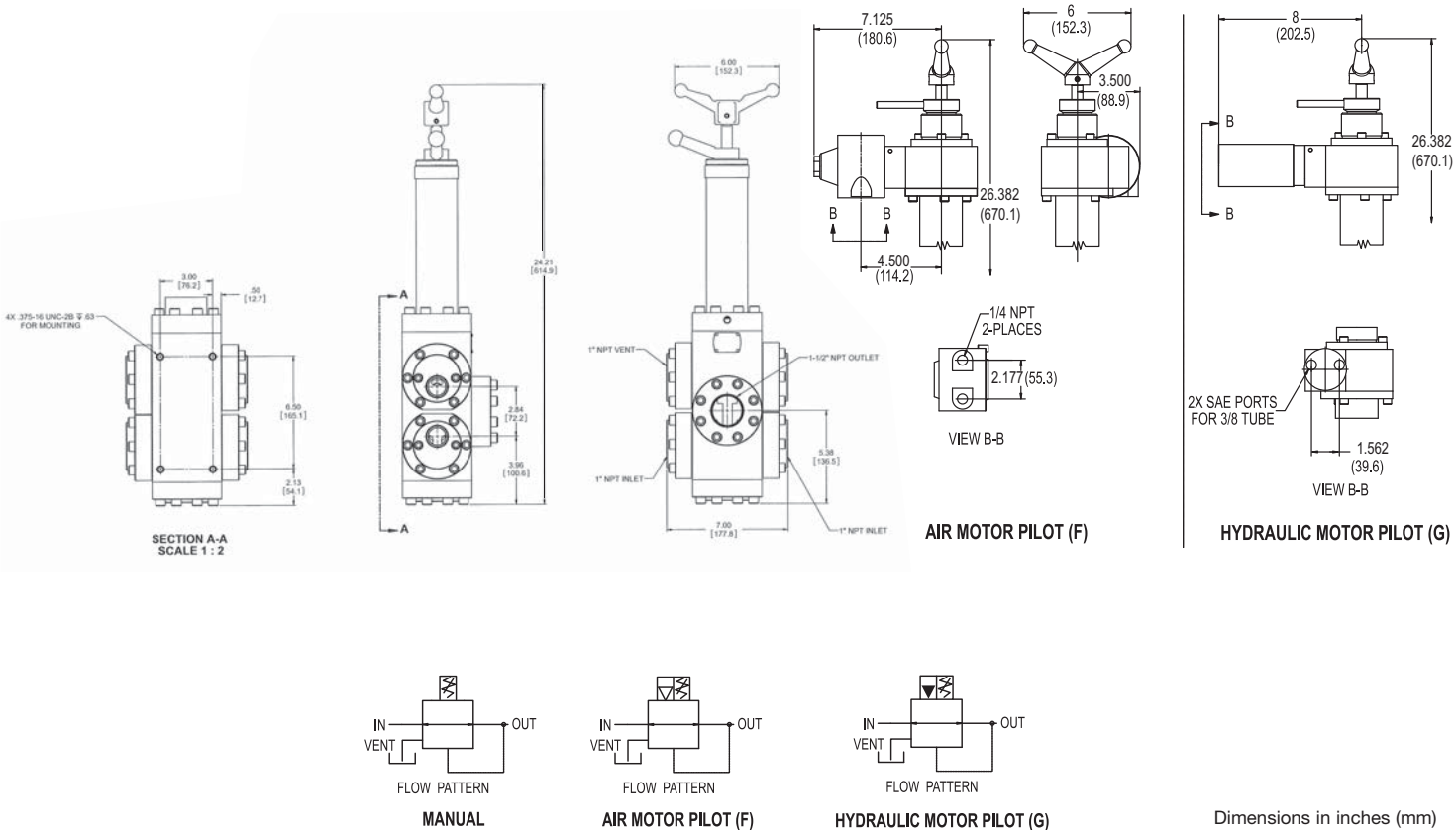

Dimensions in inches (mm)

Product Configurator

Example:		20597S6WQ2		

Adjustment Method

Blank	Manual
F	Pneumatic motor
G	Hydraulic motor

Series

20597S6WQ2	1-1/2” Pressure regulator

Option

Blank	NPT porting
-MS	SAE porting
-SS	Stainless steel flanges & trim

Regulated Pressure Range (Manual)		
Blank	High sensitivity	300 - 1600 psi (21 - 110 bar)
-1	Full range	500 - 3300 psi (34 - 228 bar)

Regulated Pressure Range (Failsafe) F & G Models		
Blank	High sensitivity	300 - 1600 psi (21 - 110 bar)
-1	Full range	500 - 3000 psi (34 - 207 bar)

3211 Fruitland Avenue • Los Angeles, CA 90058 • ☎ 800-835-1060 • Fax: 323-589-3463 • www.barksdale.com
Barksdale CONTROL PRODUCTS

Pressure Relief Valve

Series 8010

Features

- High flow with Zero Leak
- Extended seat life
- Factory pre-set or field adjustable
- Optional tamper-proof cap
- Stainless steel internals
- Metal-to-metal seal

Applications

- Pump system safety
- Compressor over pressure protection
- Hydraulic power units
- Tank protection
- Accumulator systems

General Specifications*

Working Pressure:	Hydraulic oil up to 5500 psi (380 bar)
Proof Pressure:	10,000 psi (690 bar)
Pressure Ranges:	500 - 1500 psi (35 - 105 bar) 1500 - 3500 psi (105 - 240 bar) 3500 - 5500 psi (240 - 380 bar)
Flow Rate:	15 GPM (NOMINAL)
Wetted Material: Process Fitting: Internals: Spring: Ball: Housing:	 Heat-treated 410 stainless steel 416 stainless steel Powder-coated high strength steel Tungsten Carbide Powder-coated ductile iron
Weight:	2.5 lbs.
Pressure Connection:	3/4" NPTM x 3/4" NPTF
Temperature Range:	-40° to +200°F (-40° to +93°C)
Pressure Settings:	It is recommended that cracking pressure be set 10% above working pressure.
Pressure Setpoint Adjustment:	Loosen hex nut with open-end wrench. Using allen key turn adjustment screw clockwise to increase, counterclockwise to decrease set point.

* See product configurator for additional options.

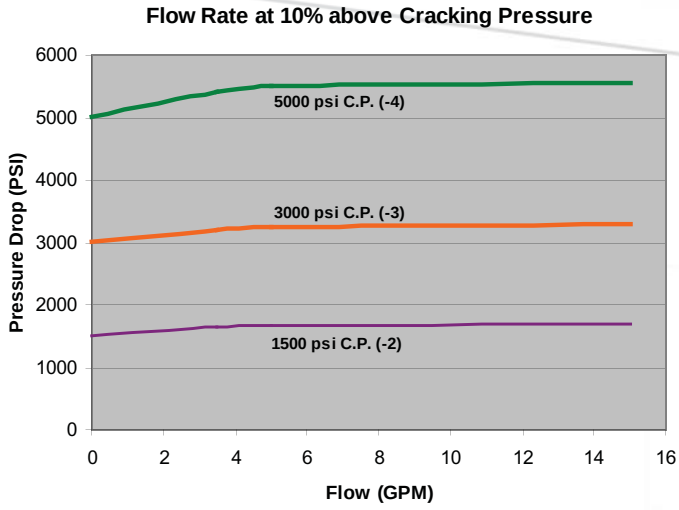

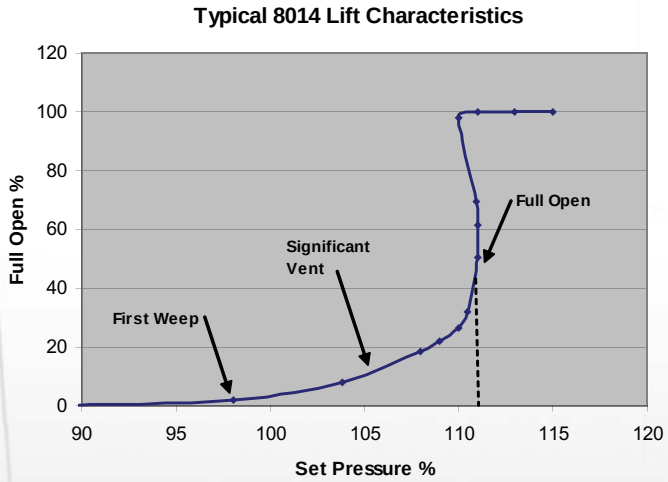

Barksdale
CONTROL PRODUCTS
CRANE
Barksdale, Inc./Barksdale GmbH
A Subsidiary of Crane Co.

Technical Drawings

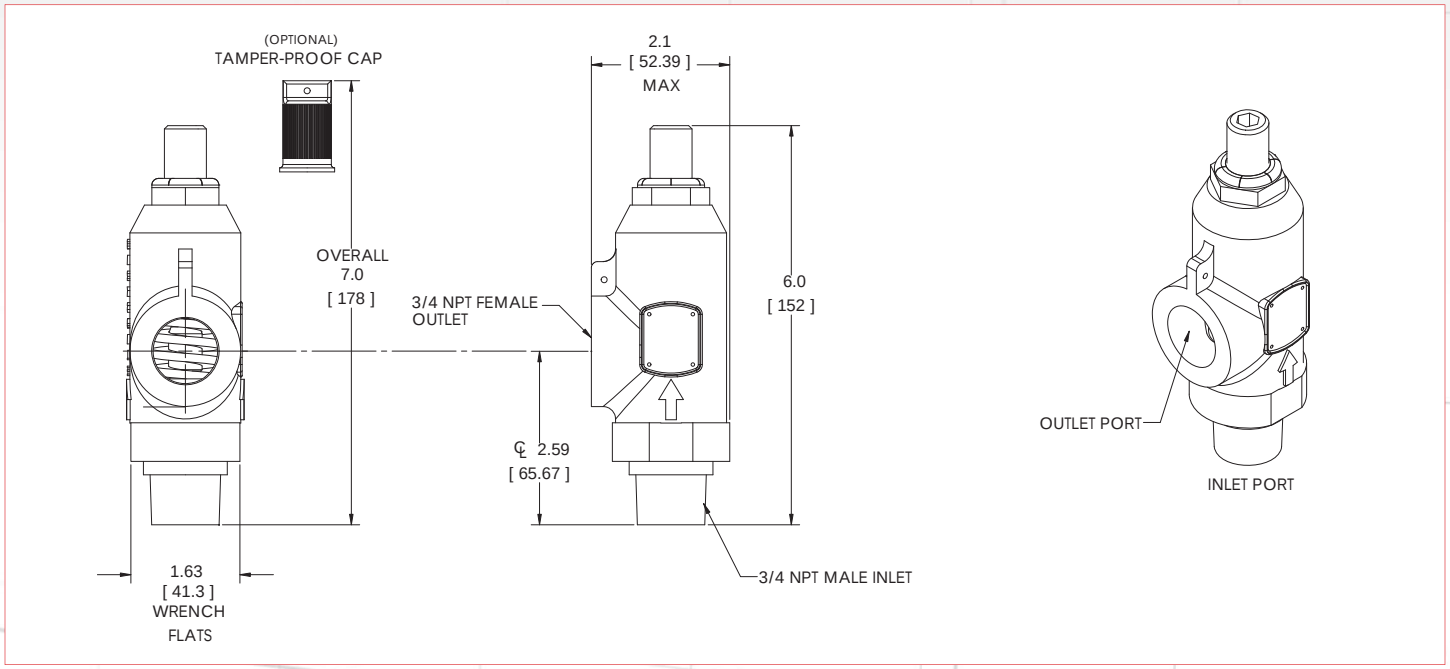

Product Configurator

Example:		801	4	-3	-33	

Prefix

T	Tamper-proof cap (optional)

Base Model

801	Inlet male - outlet Female Porting

Port Size

4	3/4" NPT ports

Pressure Range

	Adjustable Range psi (bar)		Approx. Blowdown	Proof Pressure
	Min.	Max.	psi (bar)	psi (bar)
-2	500 (35)	1500 (105)	200 (15)	10,000 (690)
-3	1500 (105)	3500 (240)	400 (28)	10,000 (690)
-4	3500 (240)	5500 (380)	600 (42)	10,000 (690)

Factory Set Point

Blank	Field Adjustable
-XX	Insert desired set point in 00's (ex. 3300 psi = -33 700 psi = -07)

Housing Option

Blank	Corrosion Resistant Ductile Iron (standard)
SS	Stainless Steel

See Barksdale's Standard Conditions of Sale • Specifications are subject to modification at any time • Bulletin #B0051-D • 08/08 • ©2008 • Printed in the U.S.A.

Description:
This is a hydraulic pressure relief valve having a factory set or field-adjustable set point. The valve is designed to work with hydraulic oil-based media. This valve is not intended for water or steam-based applications. Standard wetted materials include stainless steel, ductile iron, steel and Buna-N.

Caution:
The recommendations below are general and it is the responsibility of the user to assure that installation and maintenance are in accordance with local requirements and ASME practices. This valve should be installed by a trained service person. A media filter should be in the system to protect the valve. Neither Barksdale nor its agents assume any liability for valves improperly used in the application or improperly installed and maintained.

Installation:
Mounting: Valve shall be mounted in a vertical position and connected in the flow direction shown by the arrow. Use wrench flat 1 5/8 inch to secure valve to pipe line.

Piping: Support with adequate piping in order to avoid excessive shock and vibration. Valve inlet is 3/4" NPT male and the outlet is 3/4" NPT female. It is recommended that a minimum of 1/2" pipe size to be used for the inlet and the outlet connection.

Ambient Temperature: -40°F to 200°F

Operating Pressure Range (PSIG):

Adjustable Range Code	Pressure Range (psi)	Tolerance ± (psi)
-1	200 - 500	50
-2	500 - 1500	150
-3	1500 - 3500	350
-4	3500 - 5500	550

Field Adjustment of Relief Pressure Set Point:

1. Tools Required:
   - Allen key 5/16 inch
   - Torque wrench
   - Open end wrench 15/16 inch
2. Adjustment Procedures:
   - Use 15/16 inch open end wrench to loosen locking nut by turning it counter clockwise (CCW).
   - Insert Allen key to top of adjustment stud and rotate it counter clockwise (CCW) to decrease set pressure. Turn it clockwise (CW) to increase set pressure.
   - Re-tighten anti-vibration locking nut firmly against flat valve body and torque with a torque wrench to 300 in-lb.
     Caution: Failure to torque locking nut to specified value can cause malfunction, failure of relief pressure, or injury.

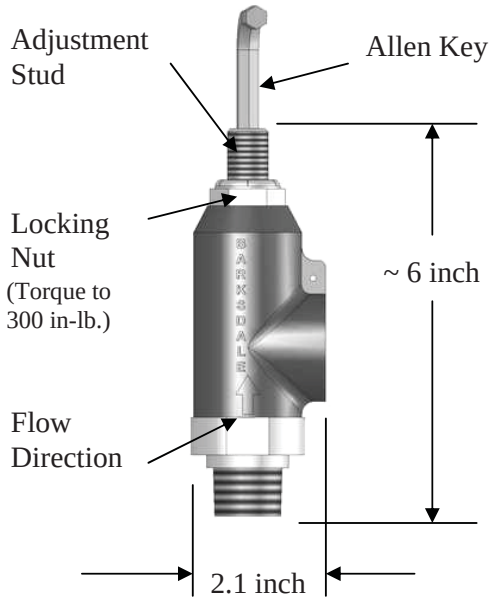

For service or ordering information:
Consult factory or authorized factory representative. Specify full catalog number (with any optional modification) and factory set point.

Global Presence

Global Presence

Barksdale Inc.
3211 Fruitland Ave.
Los Angeles, CA 90058-0843
U.S.A.
Phone: (800) 835-1060
Fax: (323) 589-3463
Email: sales@barksdale.com
www.barksdale.com

Barksdale GmbH
Dorn-Assenheimer Strasse 27
61203 Reichelsheim, Germany
Phone: (49) 6035-949-0 (main office)
(49) 6035-949-204 (sales)
Fax: (49) 6035-949-111/-113
Email: info@barksdale.de
www.barksdale.de

Barksdale GmbH
Dorn-Assenheimer Strasse 27
61203 Reichelsheim, Germany
Phone: (49) 6035-949-0 (main office)
(49) 6035-949-204 (sales)
Fax: (49) 6035-949-111/-113
Email: info@barksdale.de
www.barksdale.de

Barksdale India
SF- 43, Ansal Fortune Arcade
Sector – 18
India-201301 Noida
Phone: +91-120 25 10 522
Fax: +91-120 25 10 520
manojsingh@barksdale.in

Barksdale
CONTROL PRODUCTS